Davie County Utility Details

0.0 Index

Revised 6/2/2020

0.01 Index Page1

1.0 Trench & Pipe Details

1.01 Trench and Utility Notes
1.02 Embedment Soil Material Classification
1.03 Std. Trench Backfill
1.04 Trench Backfill for Water
1.05 Pipe Construction Notes
1.06 Encasement Pipe & Spacer Detail
1.07 Std. Pavement Repair
1.08 Cap & Tee Thrust Blocks
1.09 Compression Thrust Block At Bends
1.10 Tension Thrust Blocks Anchorage At Bends
1.11 Deadmen Thrust Block
1.12 Pipe Length Calculation Aide

2.0 Water Notes, Hydrant & Fittings

2.01 Water Main General Notes
2.02 Std. Fire Hydrant
2.03 Fire Hyd. w/ Swivel-Swivel Ell & Valve
2.04 Fire Hyd. w/ Hyd. Tee, Valve & Swivel-Swivel Ell
2.05 Std. Cross Connection
2.06 Std. 'U' Connection
2.07 Valve Box Pad & Collar
2.08 Blow-Off Hydrant at 2" End
2.09 Side Blow-Off Hydrant
2.10 4" Valve Blow-Off
2.11 Water Layout Options in Cul-De-Sac

3.0 Water Meters

3.01 0.75" Water Service
3.02 1" Water Service
3.03 1.5" Water Service
3.04 2" Water Service
3.05 Water Services Connections for 2" and 3" with 2" Meter
3.06 - reserve -
3.07 2" Water Meter & 2" RPZ , 1 of 2
3.08 2" Water Meter & 2" RPZ , 2 of 2
3.09 3" Water Meter Vault in 4" Main
3.10 4" Water Meter Vault in 6" Main
3.11 6" Water Meter Vault

4.0 Reduced Pressure Backflow Preventers (RPZ) & Fire Line

4.01 0.75" Reduced Pressure Backflow Preventer
4.02 1" Reduced Pressure Backflow Preventer
4.03 1.5" Reduced Pressure Backflow Preventer
4.04 2" Reduced Pressure Backflow Preventer
4.05 3" Reduced Pressure Backflow Preventer
4.06 4" Reduced Pressure Backflow Preventer
4.07 6" Reduced Pressure Backflow Preventer
4.08 8" Reduced Pressure Backflow Preventer
4.09 8" Fire Line RPZ & FDC in an Enclosure
4.10 8" Fire Line Building Entry

5.0 Sewer Notes & Structures

5.01 Gravity Sewer General Notes
5.02 Gravity Sewer Testing Notes
5.03 Precast Sanitary Sewer Manhole
5.04 Horseshoe Manhole Construction
5.05 Outside Drop Precast Manhole
5.06 8" Inside Drop Precast Manhole
5.07 Outside 'Y' Drop Precast Manhole
5.08 Flat Top Precast Manhole
5.09 Forcemain General Notes

6.0 Sewer & Forcemain Miscellaneous

6.01 4" Sewer Service Connection
6.02 Vent For Sanitary Sewer Manhole
6.03 Antiseep/Anchor Collar
6.04 FM Outlet Into Manhole
6.05 FM Outlet Inside Drop Manhole
6.06 Air Relief Valve & Air/Vacuum Valve Manhole

DAVIE COUNTY PUBLIC UTILITIES
(336)753-6090
daviecountyNC.gov

INDEX PAGE 1

TRENCH AND UTILITY NOTES

1. FOLLOW ALL OSHA GUIDELINES FOR SAFETY. FOR SHORING, FIELD DETERMINE SOIL CLASSIFICATION TYPE.

2. PERFORM ALL WORK TO NCDOT STANDARDS.

3. PROVIDE CONTINUOUS TRAFFIC FLOW IN AT LEAST ONE LANE DURING CONSTRUCTION.

4. PROVIDE TRAFFIC CONTROL IN ACCORDANCE WITH THE 'NORTH CAROLINA MANUAL ON UNIFORM TRAFFIC CONTROL DEVICES'.

5. PROVIDE NEAT SAWCUT EDGES WHEN PAVING IS REMOVED. PAVEMENT OPEN CUT SHALL BE 7 FT WIDE MINIMUM.

6. RESTORE AND REPAIR DAMAGED DRIVES, WALKS AND FIXTURES.

7. SEE TRENCH BACKFILL DETAIL FOR SOIL COMPACTION.

8. EACH DAY CLEAN UP AND KEEP STREETS FREE OF ALL DEBRIS EXCEPT AS APPROVED BY ENGINEER.

9. REMOVE ROCK IN ACCORDANCE WITH ALL SAFETY REGULATIONS AND COORDINATE BLASTING WITH ENGINEER

10. COORDINATE EXISTING FIBER OPTICAL CABLE CONFLICTS WITH UTILITY COMPANIES.

11. WHEN DIGGING BESIDE UTILITY POLES CONTACT THE UTILITY COMPANY FOR THEM TO STABILIZE POLE AND ADJUST GUY WIRE TO ACCOMMODATE NEW PIPE.

12. VERIFY LOCATION OF UTILITIES.
    'NC ONE CALL CENTER' '811' OR (800)632-4949

13. UTILITY REPAIR PHONE NUMBERS IN DAVIE COUNTY ARE:

DUKE ENERGY (W-S)	(336)917-2556
ENERGY UNITED ELECTRIC CORP.	(336)751-2136
PIEDMONT NATURAL GAS	(336)751-4957
CENTURY LINK	(336)526-3294
QWEST COMMUNICATIONS	(336)210-4402
TIME WARNER COMMUNICATIONS	(336)785-3390
YADKIN VALLEY TELEPHONE	(336)463-5074
MOCKSVILLE WATER	(336)751-2519
DAVIE COUNTY WATER	(336)753-6090

DAVIE COUNTY PUBLIC UTILITIES
(336)753-6090
daviecountyNC.gov

TRENCH AND UTILITY NOTES

05/20/20
GSB

SHEET: 1 OF 1
1.01

PAGE 1

EMBEDMENT SOIL MATERIAL CLASSIFICATIONS

CLASS	TYPE	DESCRIPTION OF SOIL MATERIAL
I *	--	MANUFACTURED ANGULAR, GRANULAR MATERIAL, ¼ TO 1½ INCHES (6 TO 40MM) SIZE, INCLUDING MATERIALS HAVING REGIONAL SIGNIFICANCE SUCH AS CRUSHED STONE OR ROCK, BROKEN CORAL, CRUSHED SLAG, CINDERS OR CRUSHED SHELLS.
II **	GW	WELL-GRADED GRAVELS AND GRAVEL-SAND MIXTURES, LITTLE OR NO FINES. 50% OR MORE RETAINED ON NO. 4 SIEVE. MORE THAN 95% RETAINED ON NO. 200 SIEVE. CLEAN.
	GP	POORLY GRADED GRAVELS AND GRAVEL-SAND MIXTURES, LITTLE OR NO FINES. 50% OR MORE RETAINED ON NO. 4 SIEVE. MORE THAN 95% RETAINED ON NO. 200 SIEVE. CLEAN.
	SW	WELL-GRADED SANDS AND GRAVELLY SANDS, LITTLE OR NO FINES. MORE THAN 50% PASSES NO.4 SIEVE. MORE THAN 95% RETAINED ON NO. 200 SIEVE. CLEAN.
	SP	POORLY GRADED SANDS AND GRAVELLY SANDS, LITTLE OR NO FINES. MORE THAN 50% PASSES NO. 4 SIEVE. MORE THAN 95% RETAINED ON NO. 200 SIEVE. CLEAN.
III ***	GM	SILTY GRAVELS, GRAVEL-SAND-SILT MIXTURES. 50% OR MORE RETAINED ON NO. 4 SIEVE. MORE THAN 50% RETAINED ON NO. 200 SIEVE.
	GC	CLAYEY GRAVELS, GRAVEL-SAND-CLAY MIXTURES. 50% OR MORE RETAINED ON NO. 4 SIEVE. MORE 50% RETAINED ON NO. 200 SIEVE.
	SM	SILTY SANDS, SAND-SILT MIXTURES. MORE THAN 50% PASSES NO.4 SIEVE. MORE THAN 50% RETAINED ON NO. 200 SIEVE.
	SC	CLAYEY SANDS, SAND-CLAY MIXTURES. MORE THAN 50% PASSED NO. 4 SIEVE. MORE THAN 50% RETAINED ON NO. 200 SIEVE.
IV	ML	INORGANIC SILTS, VERY FINE SANDS, ROCK FLOUR, SILTY OR CLAYEY FINE SANDS. LIQUID LIMIT 50% OR LESS. 50% OR MORE PASSES NO. 200 SIEVE.
	CL	INORGANIC CLAYS OF LOW TO MEDIUM PLASTICITY, GRAVELLY CLAYS, SANDY CLAYS, SILTY CLAYS, LEAN CLAYS. LIQUID LIMIT 50% OR LESS. 50% OR MORE PASSES NO. 200 SIEVE.
	MH	INORGANIC SILTS, MICACEOUS OR DIATOMACEOUS FINE SANDS OR SILTS, ELASTIC SILTS. LIQUID LIMIT GREATER THAN 50%. 50% OR MORE PASSES NO. 200 SIEVE.
	CH	INORGANIC CLAYS OF HIGH PLASTICITY, FAT CLAYS, LIQUID LIMIT GREATER THAN 50%. 50% OR PASSES NO. 200 SIEVE.
V	OL	ORGANIC SILTS AND ORGANIC SILTY CLAYS OF LOW PLASTICITY. LIQUID LIMIT 50% OR LESS. 50% OR MORE PASSES NO. 200 SIEVE.
	OH	ORGANIC CLAYS OF MEDIUM TO HIGH PLASTICITY. LIQUID LIMIT GREATER THAN 50%. 50% OR MORE PASSES NO. 200 SIEVE.
	PT	PEAT, MUCK AND OTHER HIGHLY ORGANIC SOILS.

* SOILS DEFINED AS CLASS 1 MATERIALS ARE NOT DEFINED IN ASTM D2487.
** IN ACCORDANCE WITH ASTM D2487, LESS THAN 5% PASS NO. 200 SIEVE.
*** IN ACCORDANCE WITH ASTM D2487, LESS THAN 12% PASS NO. 200 SIEVE.
SOILS WITH 5% TO 12% PASS NO. 200 SIEVE FALL IN BORDERLINE CLASSIFICATION, E.G., GP-GC.

DAVIE COUNTY PUBLIC UTILITIES
(336)753-6090
daviecountyNC.gov

EMBEDMENT SOIL MATERIAL CLASSIFICATION

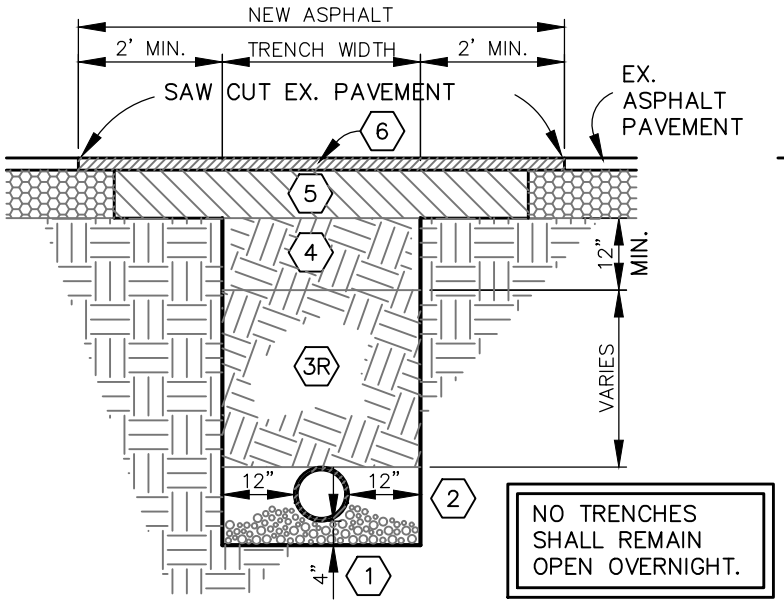

FLEXIBLE SEWER INSIDE PAVEMENT AREA

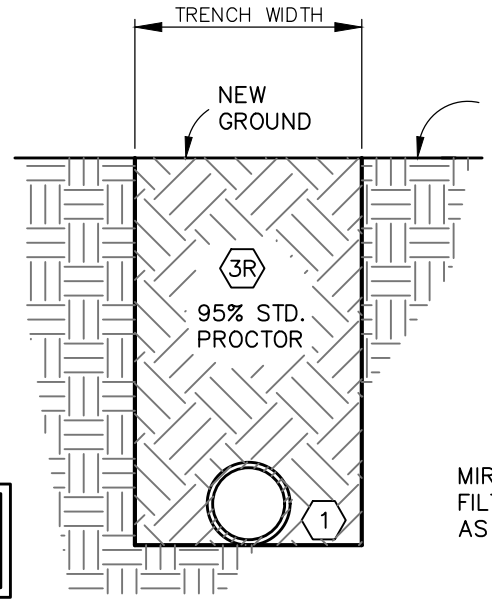

WATER & RIGID SEWER INSIDE SHOULDER AREA

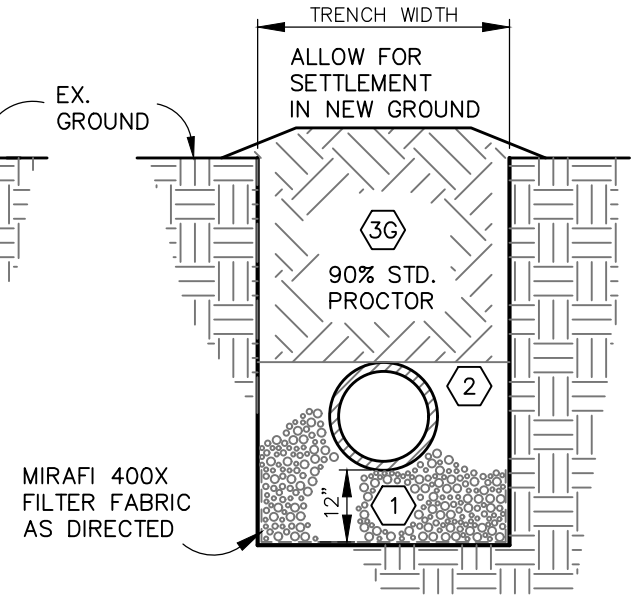

FLEXIBLE SEWER OUTSIDE ROADWAY AREA

CONTRACTOR SHALL COMPLY WITH ALL OSHA REGULATIONS FOR TRENCH SHORING AND SLOPING. A "COMPETENT PERSON" AS DEFINED BY OSHA SHALL BE ON SITE AT ALL TIMES WHEN ANY WORKER IS IN A TRENCH.

SEE EMBEDMENT SOIL MATERIAL CLASSIFICATIONS TABLE FOR SOIL CLASSES. ADD WATER TO EACH LAYER AS NEEDED OR DIRECTED FOR COMPACTION AND MECHANICALLY TAMP THOROUGHLY.

KEYNOTE FOR BEDDING PIPE

(1) PROVIDE CLASS I, II OR III SOIL FOR BEDDING. DIG BELL HOLES IN ACCORDANCE WITH MANUFACTURERS RECOMMENDATIONS.

A. FOR COMPETENT TRENCH BOTTOM AS DETERMINED BY ENGINEER
   1. PLACE FLEXIBLE SEWER PIPE ON 4" BEDDING OVER COMPETENT SOIL BOTTOM.
   2. PLACE RIGID SEWER AND FLEXIBLE AND RIGID WATER PIPE ON COMPETENT SOIL BOTTOM.

B. FOR NON COMPETENT TRENCH BOTTOM, PLACE ALL PIPE ON 12" BEDDING OVER MIRAFI 400X FILTER FABRIC OR AS DIRECTED BY ENGINEER.

C. SEWER PIPE REFERS TO BOTH STORM AND SANITARY. RIGID PIPE IS DUCTILE AND CONCRETE. FLEXIBLE PIPE IS PVC AND HDPE.

KEYNOTES FOR TRENCH BACKFILL

(2) PROVIDE CLASS I, II OR III SOIL BACKFILL. COMPACT SOIL IN 6" LAYERS TO 95% OF STANDARD PROCTOR AROUND ALL FLEXIBLE SEWER PIPE.

(3R) PROVIDE CLASS I, II, III OR IV SOIL BACKFILL. COMPACT IN 6" LAYERS TO 95% STANDARD PROCTOR DENSITY

(3G) PROVIDE CLASS I, II, III OR IV SOIL BACKFILL. COMPACT IN 6" LAYERS TO 90% STANDARD PROCTOR DENSITY.

(4) PROVIDE CLASS I, II, III OR IV SOIL BACKFILL. COMPACT IN 6" LAYERS TO 100% STANDARD PROCTOR DENSITY FOR TOP 1 FT OF SUBGRADE.

(5) SEE PAVING DESIGN TABLE FOR SUB-BASE, BASE AND BINDER.

(6) SEE PAVING DESIGN TABLE FOR SURFACE COURSE.

STD. TRENCH BACKFILL

32 TRNCHFLL

PAGE 3

SHEET: 1 OF 1 05/19/20 GSB

1.03

STD. TRENCH BACKFILL

DAVIE COUNTY PUBLIC UTILITIES
daviecountyNC.gov (336)753-6090

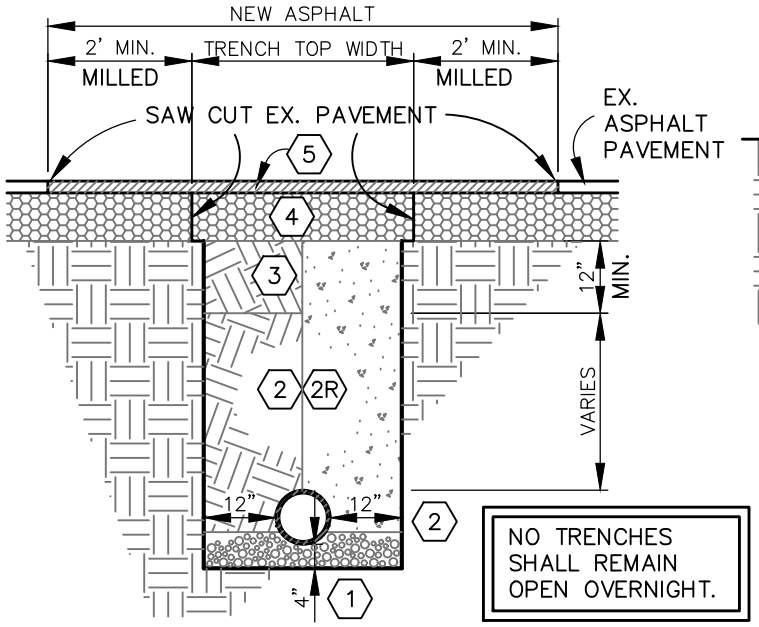

NO TRENCHES SHALL REMAIN OPEN OVERNIGHT.

INSIDE PAVEMENT AREA

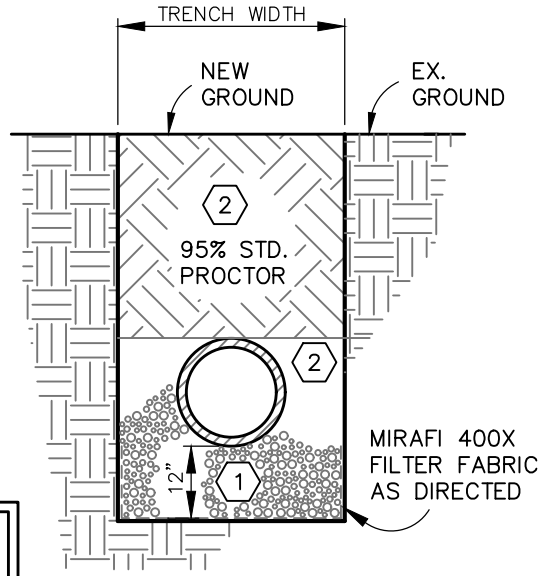

OUTSIDE PAVEMENT AREA

CONTRACTOR SHALL COMPLY WITH ALL OSHA REGULATIONS FOR TRENCH SHORING AND SLOPING. A "COMPETENT PERSON" AS DEFINED BY 'OSHA' SHALL BE ON SITE AT ALL TIMES WHEN ANY WORKER IS IN A TRENCH.

SEE EMBEDMENT SOIL MATERIAL CLASSIFICATIONS TABLE FOR SOIL CLASSES. ADD WATER TO EACH LAYER AS NEEDED OR DIRECTED FOR COMPACTION AND MECHANICALLY TAMP THOROUGHLY.

KEYNOTE FOR BEDDING PIPE

(1) PROVIDE CLASS I, II, III SOIL FOR BEDDING. DIG BELL HOLES IN ACCORDANCE WITH MANUFACTURERS RECOMMENDATIONS.

A. PLACE PIPE ON COMPETENT SOIL BOTTOM.

B. FOR NON COMPETENT TRENCH BOTTOM, PLACE PIPE ON 12" BEDDING OVER MIRAFI 400X FILTER FABRIC AS DIRECTED BY ENGINEER.

KEYNOTES FOR TRENCH BACKFILL

(2) PROVIDE CLASS I, II, III OR IV SOIL BACKFILL. COMPACT SOIL IN 6" LAYERS TO 95% STANDARD PROCTOR DENSITY IN ALL PAVED AND SHOULDER AREAS AND TO 90% STANDARD PROCTOR DENSITY FOR ALL OTHER AREAS.

(2R) PROVIDE FLOWABLE FILL FOR HEAVY DUTY ASPHALT REPAIR, SEE PAVING DESIGN TABLE FOR SUBGRADE.

(3) PROVIDE CLASS I, II, III OR IV SOIL BACKFILL. COMPACT SOIL IN 6" LAYERS TO 100% STANDARD PROCTOR DENSITY FOR TOP 1 FT OF SUBGRADE.

(4) SEE PAVING DESIGN TABLE FOR PAVING.

(5) SEE PAVING DESIGN TABLE FOR SURFACE COURSE.

TRENCH BACKFILL

32 TRNCHFLL-W

PAGE 4

SHEET: 1 OF 1 05/19/20 GSB

1.04

TRENCH BACKFILL FOR WATER

DAVIE COUNTY PUBLIC UTILITIES
daviecountyNC.gov (336)753-6090

PIPE CONSTRUCTION NOTES:

1. FITTINGS SHALL BE CLASS 51 DUCTILE IRON MECHANICAL JOINTS WITH AN APPROPRIATE TRANSITION GASKET TO PVC WHERE APPLICABLE.

2. WHEN CONNECTING DUCTILE IRON PIPE TO PVC PIPE, USE AN APPROPRIATE TRANSITION GASKETS TO PVC BELL END AND A SLEEVE WITH APPROPRIATE GASKETS AT THE PLAIN END.

3. DEFLECTION AT THE JOINTS SHALL NOT EXCEED 14" FOR LENGTH OF PIPE OR 80% OF MANUFACTURER'S RECOMMENDATION, WHICHEVER IS LESS.

4. CASING PIPES SHALL BE BORED UNLESS OTHERWISE NOTED. SEE CASING PIPE SPACERS DETAIL.

5. LINE ALL PIPE STREAM CROSSINGS WITH CLASS 'B' RIPRAP IMMEDIATELY AFTER THE INSTALLATION OF NEW PIPE. SEE STREAM CROSSING DETAIL.

6. PROVIDE JOINT RESTRAINT AT ALL BENDS, TEES AND CAPS. JOINT RESTRAINT SHALL BE A COMBINATION OF CONCRETE THRUST BLOCKING ACCORDING TO DETAILS SHOWN AND MECHANICAL JOINT RESTRAINT AS APPROVED BY THE ENGINEER. MECHANICAL JOINT RESTRAINTS SHALL BE PLACED AT MULTIPLE LOCATIONS ON EACH SIDE OF FITTINGS ACCORDING TO MANUFACTURER'S RECOMMENDATION.

7. MECHANICAL JOINT RESTRAINT SHALL BE
   A. FOR DI PIPE TO MJ: CLOW MJ FIELD LOK, MEGLUG #1100, MIDCO #4 RESTRAINT, SMITH-BLAIR #981 OR STAR PIPE #3000, #3000S.

   B. FOR C900 PIPE TO MJ: CLOW MJ FIELD LOK, MEGLUG #2000PV, MIDCO #4 RESTRAINT, SMITH-BLAIR #981 OR STAR PIPE #4000, #1000C, #1200.

   C. FOR SDR-21 PIPE TO MJ: MEGLUG #2000PV MIDCO #4 RESTRAINT, SMITH-BLAIR #981 OR STAR PIPE #4000, #1000S. NOT APPLICABLE TO NEW PROJECTS.

   D. FOR PIPE BELL/SPIGOT RESTRAINT: SMITH-BLAIR #932, STAR PIPE #4100P, #1100.

8. CONCRETE THRUST BLOCK RESTRAINT AND SUBSURFACE SUPPORT SHALL BE 4000 PSI CLASS 'B' CONCRETE WITH 5% AIR ENTRAINMENT, 0.45 WATER/CEMENT RATIO AND PLACED AT A SLUMP NO GREATER THAN 3".

9. CONTRACTOR SHALL SUBMIT TO ENGINEER THE MODEL, MANUFACTURER AND TYPICAL PLACEMENT OF RESTRAINT SYSTEM TO BE USED ON PROJECT.

DAVIE COUNTY PUBLIC UTILITIES
(336)753-6090
daviecountyNC.gov

PIPE CONSTRUCTION NOTES

MATERIAL:

1. ENCASEMENT PIPE: STEEL PIPE ASTM A139 GRADE B WITH DIAMETER AND WALL THICKNESS PER TABLE OR NOTE. SEE NCDOT ENCASEMENT PROVISIONS FOR ADDITIONAL REQUIREMENTS.
2. CARRIER PIPE: DUCTILE IRON MJ RESTRAINT.
3. SPACERS: CASCADE MFG CCS-ER. PROVIDE FOR RADIAL RESTRAINT OF CARRIER PIPE INSIDE ENCASEMENT PIPE
4. END SEALS: CASCADE MFG MODEL CCES.

INSTALLATION:

1. INSTALL (3)THREE SPACERS PER JOINT OF DUCTILE IRON PIPE: (1)ONE AT EACH END AND (1)ONE IN THE MIDDLE OF PIPE.

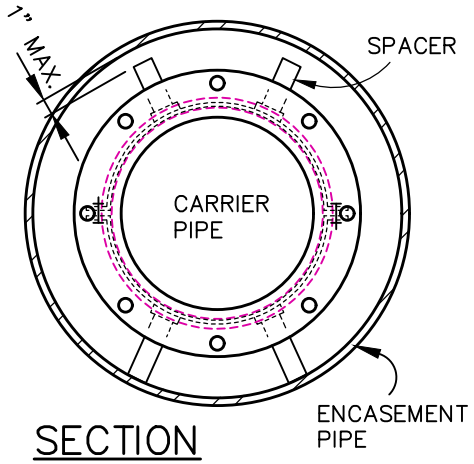

SECTION

ENCASEMENT PIPE & SPACER DETAIL

12 SPACER-DOT

PAGE 6

SHEET: 1 OF 1 05/19/20 GSB

1.06

ENCASEMENT PIPE & SPACER DETAIL

DAVIE COUNTY PUBLIC UTILITIES
daviecountyNC.gov (336)753-6090

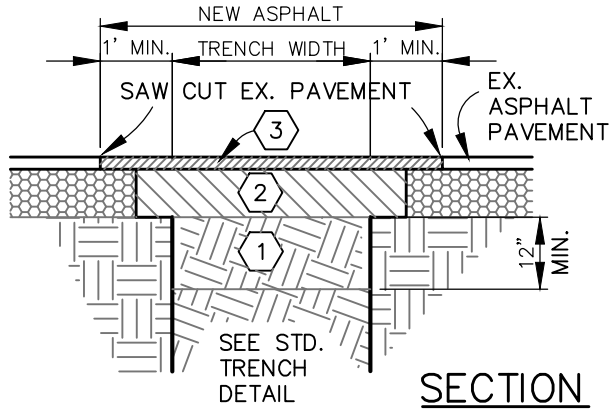

SECTION

KEYNOTES

1. FOR TOP 1 FT OF SUBGRADE, PROVIDE FLOWABLE CLASS I, II, III OR IV SOIL BACKFILL COMPACTED IN 6" LAYERS TO 100% STANDARD PROCTOR DENSITY.
2. SEE PAVEMENT DATA TABLE FOR SUB-BASE, BASE AND BINDER.
3. SEE PAVEMENT DATA TABLE FOR SURFACE COURSE.

DOT NOTE

DO NOT USE FOR DIRECTIONAL BORING.

SITE PAVEMENT REPAIR DETAIL

32 PAVE-REPAIR SITE

PAGE 7

SHEET: 1 OF 1 05/19/20 GSB

1.07

STD. PAVEMENT REPAIR

DAVIE COUNTY PUBLIC UTILITIES
daviecountyNC.gov (336)753-6090

CONCRETE DIMENSIONS

DIM	MIN DIM FOR PIPE DIA(D)ø 2–4"	6"	8"	10"	12"	16"
A	19"	19"	24"	28"	35"	44"
B	15"	15"	18"	21"	25"	33"
C	6"	6"	8"	8"	10"	12"

COVER FITTING WITH PLASTIC BEFORE PLACING CONCRETE

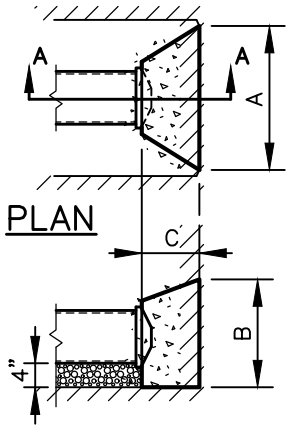

CAP THRUST BLOCK

THRBK1

CONCRETE DIMENSIONS

DIM	MIN DIM FOR PIPE DIA(D)ø 2–4"	6"	8"	10"	12"	16"
A	6"	6"	8"	12"	12"	16"
B	8"	8"	10"	12"	15"	20"
C	8"	8"	9"	10"	12"	14"
E	6"	6"	8"	8"	8"	10"

COVER FITTING WITH PLASTIC BEFORE PLACING CONCRETE

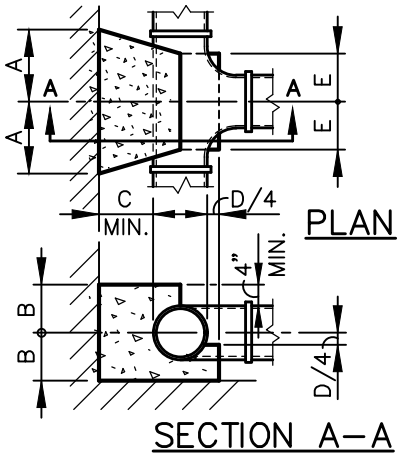

TEE THRUST BLOCK

THRBK2

PAGE 8

SHEET: 1 OF 1 05/19/20 GSB

1.08

CAP & TEE THRUST BLOCKS

DAVIE COUNTY PUBLIC UTILITIES
daviecountyNC.gov (336)753–6090

COVER FITTING WITH PLASTIC
BEFORE PLACING CONCRETE

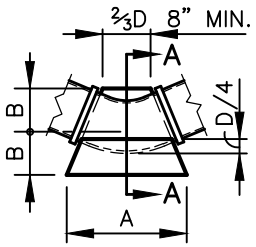

PLAN

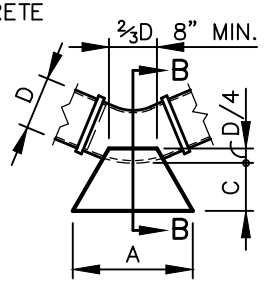

ELEVATION

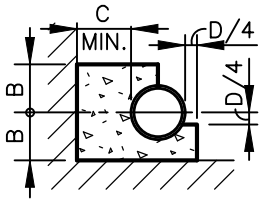

SECTION A-A

HORIZONTAL

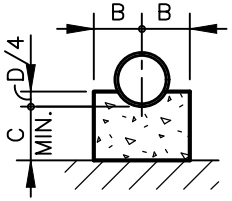

SECTION B-B

VERTICAL

CONCRETE DIMENSIONS

BEND DEG	DIM	MIN DIM FOR PIPE DIA(D)ø					
		2–4"	6"	8"	10"	12"	16"
1/32 11¼°	A	6"	6"	8"	10"	12"	16"
	B	7"	7"	8"	9"	10"	12"
	C	7"	7"	7"	8"	8"	9"
1/16 22½°	A	9"	9"	12"	18"	21"	27"
	B	7"	7"	7"	8"	10"	12"
	C	8"	8"	9"	10"	11"	14"
1/8 45°	A	15"	15"	20"	25"	30"	40"
	B	7"	7"	8"	9"	11"	15"
	C	8"	8"	9"	10"	11"	15"
1/4 90°	A	18"	18"	24"	31"	36"	49"
	B	8"	8"	12"	14"	16"	21"
	C	9"	9"	10"	11"	12"	16"

COMPRESSION THRUST BLOCKS AT BENDS THRBK3

PAGE 9

SHEET: 1 OF 1 05/19/20 GSB

1.09

COMPRESSION THRUST BLOCKS AT BENDS

DAVIE COUNTY PUBLIC UTILITIES
daviecountyNC.gov (336)753-6090

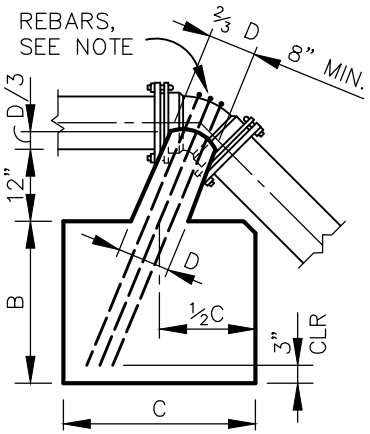

ELEVATION

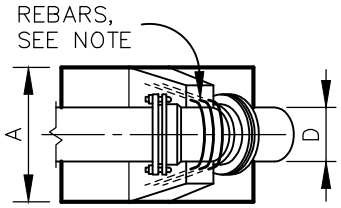

PLAN

CONCRETE DIMENSIONS

BEND DEG	DIM	MIN DIM FOR PIPE DIA(D)ø 2–4"	6"	8"	10"	12"	16"
1/32 11¼°	A	16"	18"	18"	17"	36"	42"
	B	15"	15"	21"	15"	24"	24"
	C	21"	24"	30"	33"	36"	48"
1/16 22½°	A	20"	24"	40"	44"	48"	52"
	B	21"	21"	27"	30"	30"	30"
	C	27"	30"	32"	46"	48"	66"
1/8 45°	A	24"	30"	36"	48"	54"	62"
	B	30"	30"	33"	36"	42"	48"
	C	30"	36"	48"	54"	57"	78"

NOTES:

1. EMBED 3–#6 REINFORCING STEEL MIN. OF 20" STRAIGHT OR 10" W/ 180° STD. HOOK
2. COVER FITTING WITH PLASTIC BEFORE PLACING CONCRETE

TENSION THRUST BLOCKS ANCHORAGE AT BENDS

32 THRBK4

PAGE 10

SHEET: 1 OF 1 05/20/20 GSB

1.10

TENSION THRUST BLOCKS ANCHORAGE AT BENDS

DAVIE COUNTY PUBLIC UTILITIES
daviecountyNC.gov (336)753-6090

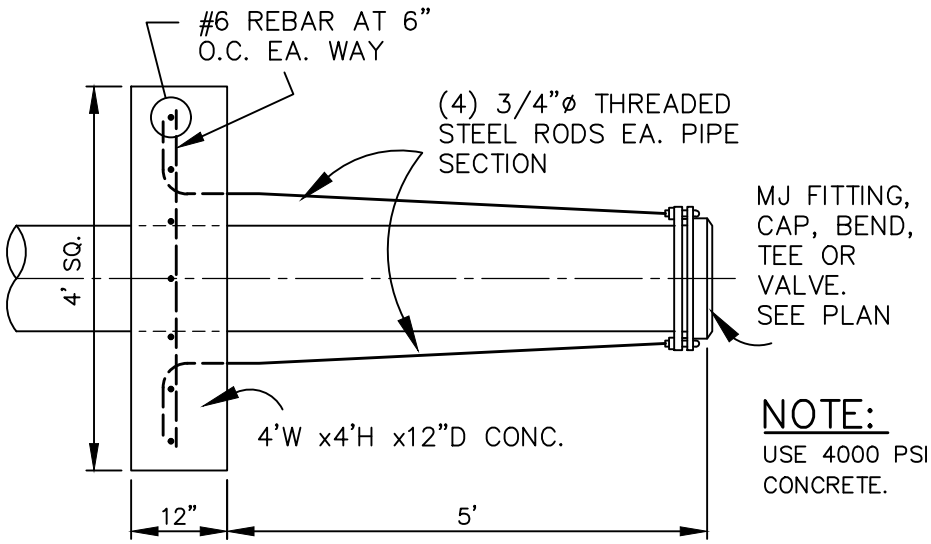

NOTE:
USE 4000 PSI
CONCRETE.

DEADMAN END THRUST BLOCK

24 THRBK_DEADMAN END

PAGE 10

SHEET: 1 OF 1 05/20/20
GSB
1.11

DEADMAN END
THRUST BLOCK

DAVIE COUNTY PUBLIC UTILITIES
daviecountyNC.gov (336)753-6090

PIPE LENGTH CALCULATION AIDE

PIPE DIA.	22½° 'C2'	BOTH 22½° 2x'C2'='E'		90° + 22½° 'A'+'C2'='E'	
6"	2"	4"	0.33'	9"	0.75'
8"	2.5"	5"	0.42'	11.5"	0.96'
10"	3"	6"	0.50'	13.5"	1.13'
12"	3.5"	7"	0.58'	16"	1.33'
16"	3.75"	7.5"	0.63'	20"	1.67'

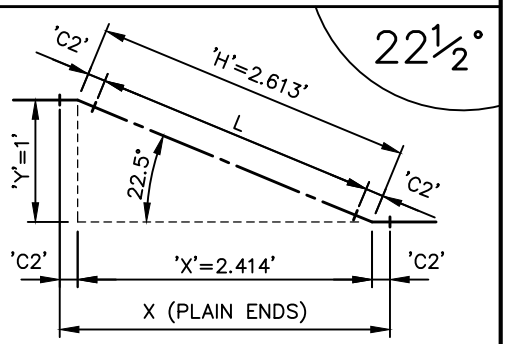

HORIZ DIST. (X)=(2.414 x 'Y')+'E'
PIPE LENGTH (L)=(2.613 x 'Y')−'E'

CALCULATION STEPS:

1. VERIFY VERTICAL DIFFERENCE BETWEEN THE TWO PIPES ('Y').
2. DETERMINE ('E') FOR END CONDITIONS & PIPE SIZE
3. CALCULATE THE REQUIRED HORIZONTAL DISTANCE (X).
4. CALCULATE THE REQUIRED LENGTH OF SLOPED PIPE (L).

FOR COMPACT M.J. FITTING

PAGE 12

SHEET: 1 OF 1 05/19/20 GSB

1.12

PIPE LENGTH CALCULATION AIDE

DAVIE COUNTY PUBLIC UTILITIES
daviecountyNC.gov (336)753-6090

WATER MAIN GENERAL NOTES:

1. STANDARD WATER MAIN SHALL BE DR14 305 PSI C900 PVC WITH DUCTILE IRON FITTINGS OR CEMENT LINED ASPHALTIC COATED DUCTILE IRON CLASS 50 FOR PUSH ON AND CLASS 51 FOR MJ.

2. NCDENR PER SECTION .0904 REQUIRES PVC WATER MAIN TO HAVE 30" MINIMUM GROUND COVER.

3. NCDOT REQUIRES 36" MINIMUM COVER IN ROADWAY AREA.

4. DUCTILE IRON PIPE SHALL BE USED IF WATER MAIN DOES NOT MEET OR EXCEED THE FOLLOWING SEPARATION:
   A. 18" VERTICAL ABOVE CROSSING STORM OR SANITARY SEWER PIPE.
   B. 10' HORIZONTAL SEPARATION FROM PARALLEL SEWER PIPE.
   C. 10' HORIZONTAL FROM STREAM, LAKE OR WATER IMPOUNDMENTS.

5. CENTER ONE 20' SECTION OF DUCTILE IRON PIPE AT ALL CULVERT PIPE CROSSINGS. MAINTAIN 18" VERTICAL CLEARANCE BETWEEN NEW WATER LINE AND EXISTING PIPES.

6. DISINFECT, FLUSH AND PRESSURE TEST WATER MAIN UNDER UTILITY INSPECTION AS FOLLOWS:
   A. DISINFECT SYSTEM BY MAINTAINING DISINFECTANT AT 50 PPM IN SYSTEMS FOR 24 HOURS.

   B. FLUSH SYSTEM THOROUGHLY TO 0 PPM, TAKE SAMPLE FROM FLUSHED SYSTEM AND SEND TO LAB FOR BACTERIOLOGICAL TEST.

   C. PRESSURE TEST THE SYSTEM AT 175 PSI OR GREATER. MAINTAIN FOR AT LEAST THREE HOURS. ADD SUFFICIENT WATER TO BRING BACK TO STARTING PRESSURE AFTER THREE HOURS. WATER ADDED SHALL NOT EXCEED THE GPH/1000 FT OF LINE TESTED PER THE FOLLOWING TABLE. PRESSURE TESTING MUST BE OBSERVED BY THE A UTILITY REPRESENTATIVE AND DOCUMENTED IN THE CONSTRUCTION RECORDS BY THE CONTRACTOR.

Allowable Leakage

Pipe Dia. in.	Gal/1000ft 20'L pipe gal/hr	Gals for 3 hrs	Water Added Gals
4	0.33	0.99	D & H in .0034 x D²(H)
6	0.5	1.50	D & H ft 5.875 x D²(H)
8	0.67	2.01	
12	1	3.00	

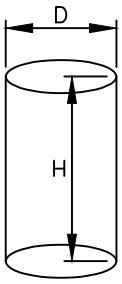

DAVIE COUNTY PUBLIC UTILITIES
(336)753-6090
daviecountyNC.gov

WATER MAIN GENERAL NOTES

06/02/20
GSB

SHEET: 1 OF 1
PAGE 1

2.01

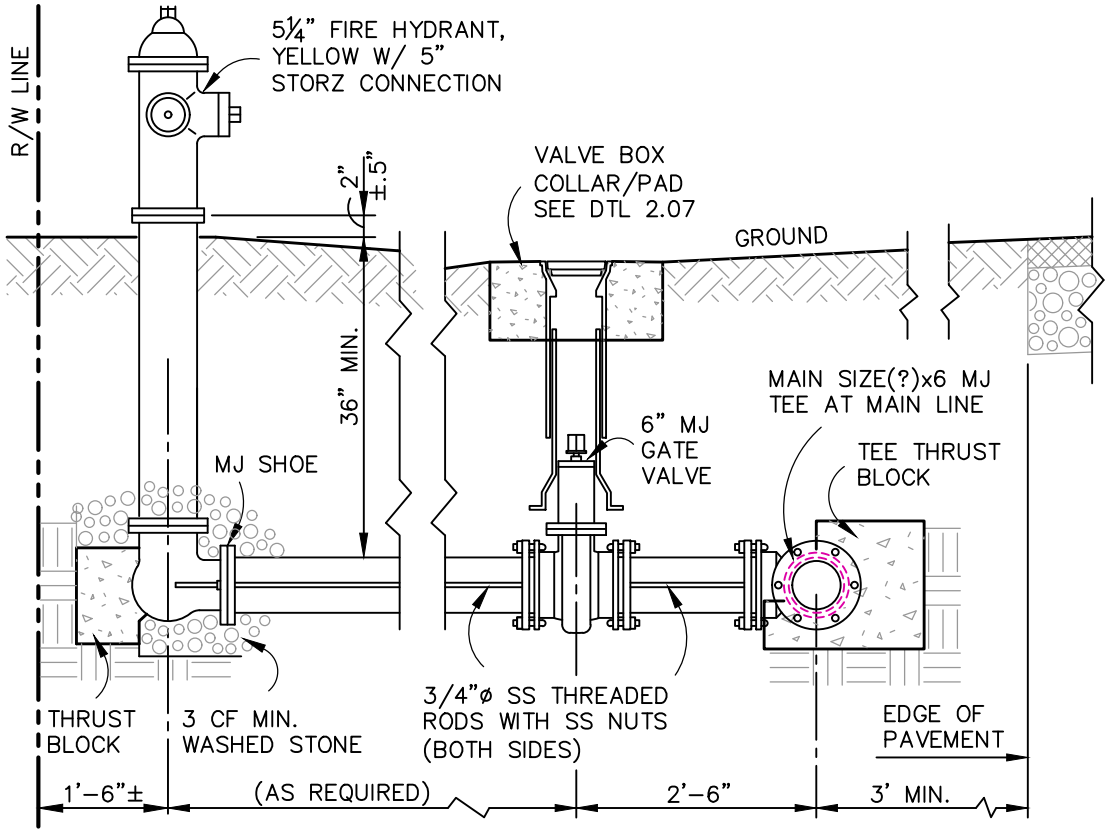

STD. FIRE HYDRANT

DAVIE COUNTY STD 24 W-FHYD-DC

PAGE 2

SHEET: 1 OF 1 05/20/20 GSB

2.02

STD. FIRE HYDRANT

DAVIE COUNTY PUBLIC UTILITIES
daviecountyNC.gov (336)753-6090

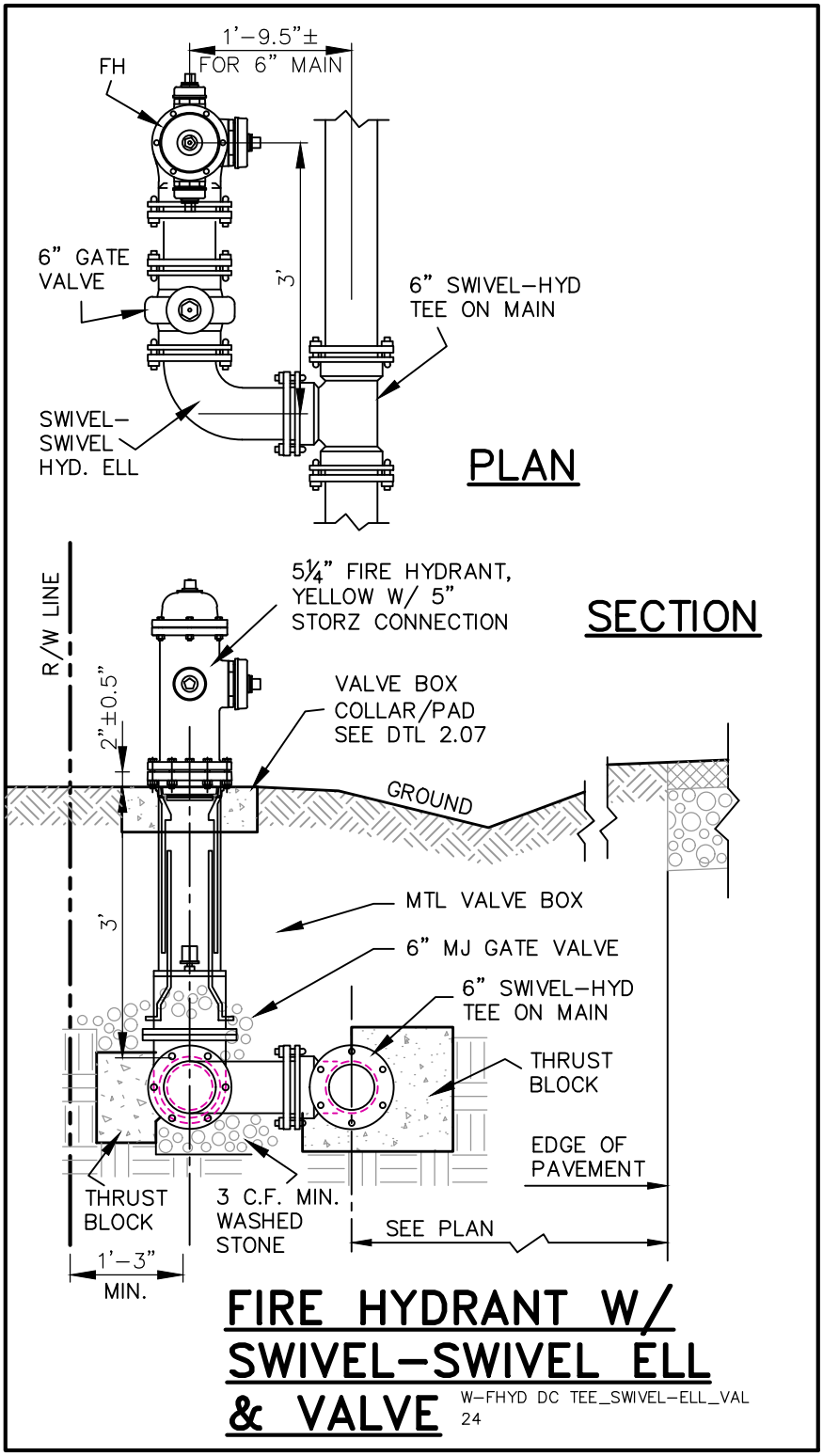

FIRE HYDRANT W/ SWIVEL-SWIVEL ELL & VALVE

W-FHYD DC TEE_SWIVEL-ELL_VAL
24

DAVIE COUNTY PUBLIC UTILITIES
(336)753-6090
daviecountyNC.gov

FIRE HYDRANT W/ SWIVEL-SWIVEL ELL & VALVE

05/20/20
GSB

SHEET: 1 OF 1

2.03

PAGE 3

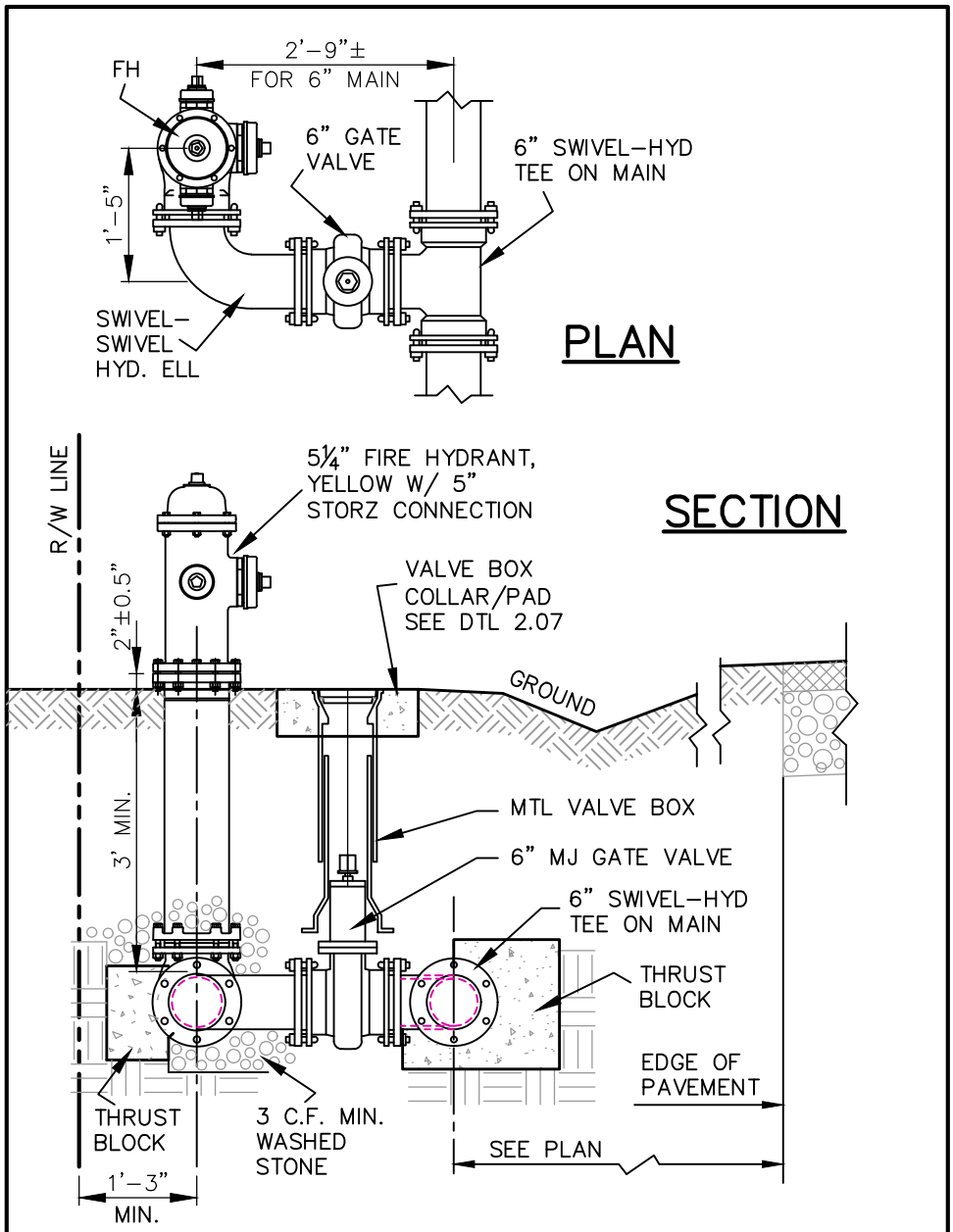

FIRE HYDRANT W/ HYD. TEE, VALVE & SWIVEL-SWIVEL ELL

24 W-FHYD DC TEE_VAL_SWIVEL-ELL

DAVIE COUNTY PUBLIC UTILITIES
(336)753-6090
daviecountyNC.gov

FIRE HYDRANT W/ HYD. TEE, VALVE & SWIVEL-SWIVEL ELL

SHEET: 1 OF 1 05/20/20 GSB

2.04

PAGE 4

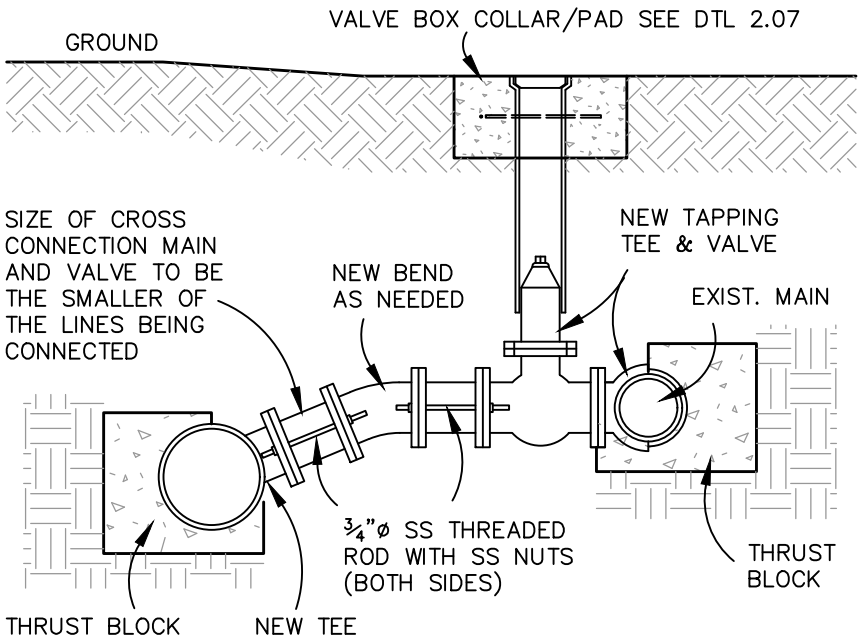

STD. CROSS CONNECTION

24 W-CRS_CON

PAGE 5

SHEET: 1 OF 1 05/20/20 GSB

2.05

STD. CROSS CONNECTION

DAVIE COUNTY PUBLIC UTILITIES
daviecountyNC.gov (336)753-6090

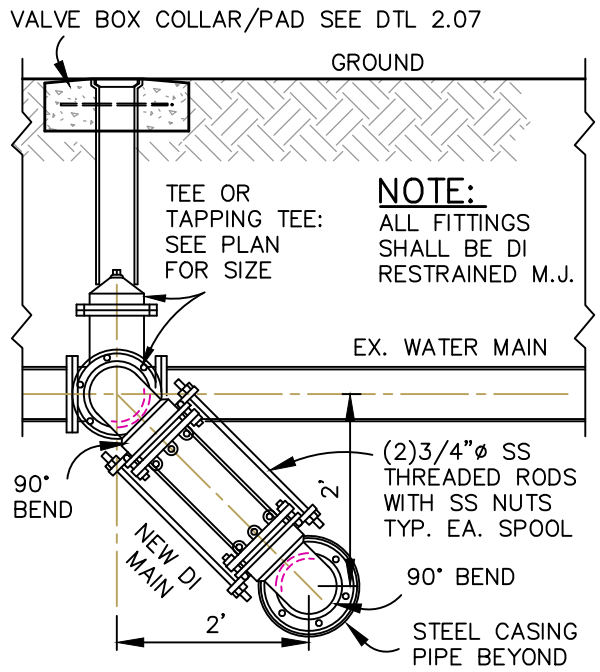

STD. 'U' CONNECTION

24 W-UCON

PAGE 6

SHEET: 1 OF 1 05/20/20 GSB

2.06

STD. 'U' CONNECTION

DAVIE COUNTY PUBLIC UTILITIES
daviecountyNC.gov (336)753-6090

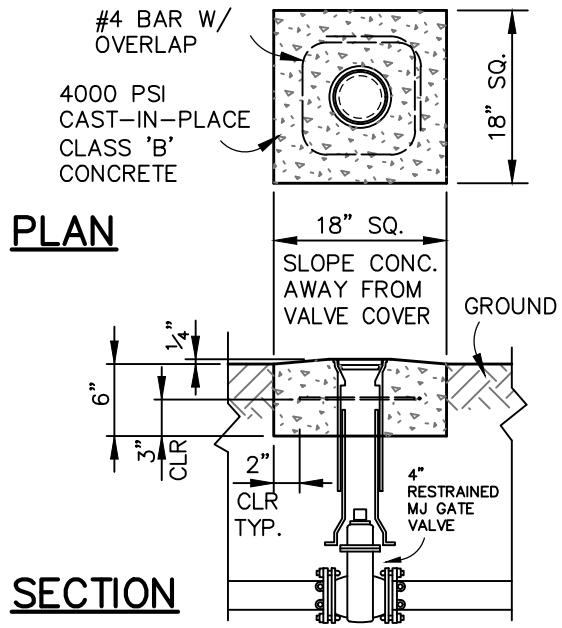

VALVE BOX PAD

CAST-IN-PLACE
IN PAVED AREA

32 W-VALBX-PAD-DC

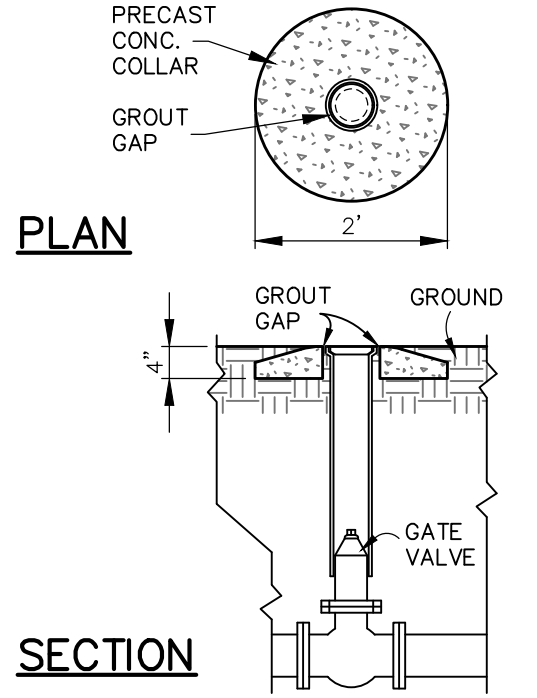

VALVE BOX COLLAR

PRECAST IN UNPAVED AREA

24 W-VALBX-COLLAR-DC

PAGE 7

SHEET: 1 OF 1 05/20/20 GSB

2.07

VALVE BOX
PAD & COLLAR

DAVIE COUNTY PUBLIC UTILITIES
daviecountyNC.gov (336)753-6090

GENERAL NOTES

1. INSTALL ALL PIPING PRIOR TO DISINFECTING MAIN LINE.
2. PROVIDE RESTRAINED FITTINGS AT ALL JOINTS
3. SET METER BOX TO GRADE ON 6 BRICKS.

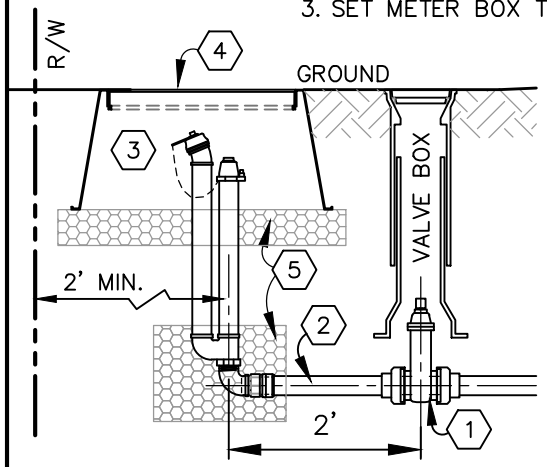

MATERIAL KEYNOTES

1. 2" GATE VALVE WITH SQ. OPERATING NUT RESTRAINED TO MAIN
2. 2"ø SCH 40 BRASS OR TYPE 'K' COPPER PIPE WITH COMP-IPT ENDS.
3. BLOW-OFF HYDRANT: GIL INDUSTRIES 2" HIDDEN OR KUPFERLE MAINGUARD #78
4. METER BOX: PLASTIC BOX & CAST IRON LID EQUAL TO 'NDS' PRO 125CDMCIF.
5. #57 WASHED STONE

BLOW-OFF HYDRANT AT 2" END

DAVIE CO. STD 24 W-BLWOF 2END DC

GENERAL NOTES

1. INSTALL ALL PIPING PRIOR TO DISINFECTING MAIN LINE.
2. PROVIDE RESTRAINED FITTINGS AT ALL JOINTS
3. SET METER BOX TO GRADE ON 6 BRICKS.

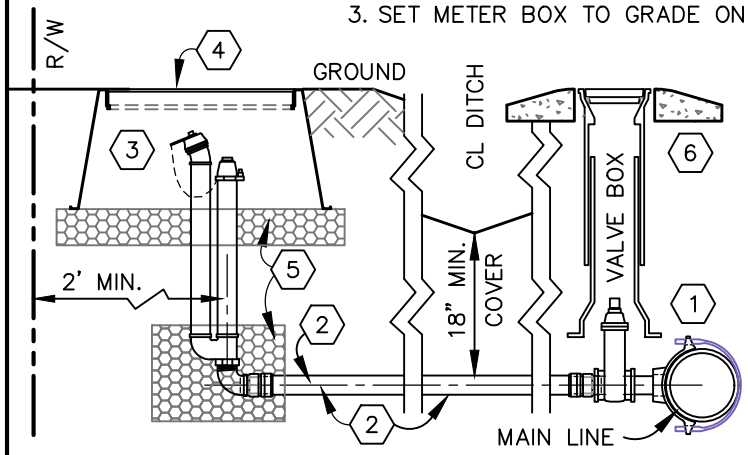

SIDE BLOW-OFF HYDRANT

DAVIE CO. STD

24 W-BLWOF SIDE DC

MATERIAL KEYNOTES

1. SADDLE ON MAIN LINE WITH 2" IPT DRESSER TAP, BRASS NIPPLE & 2" GATE VALVE W/ SQ. OPERATING NUT
2. 2"ø SCH 40 BRASS OR TYPE 'K' COPPER PIPE WITH COMP-IPT ENDS.
3. BLOW-OFF HYDRANT: GIL INDUSTRIES 2" HIDDEN OR KUPFERLE MAINGUARD #78
4. METER BOX: PLASTIC BOX & CAST IRON LID EQUAL TO 'NDS' PRO 125CDMCIF.
5. #57 WASHED STONE
6. VALVE BOX COLLAR/PAD SEE DTL 2.07

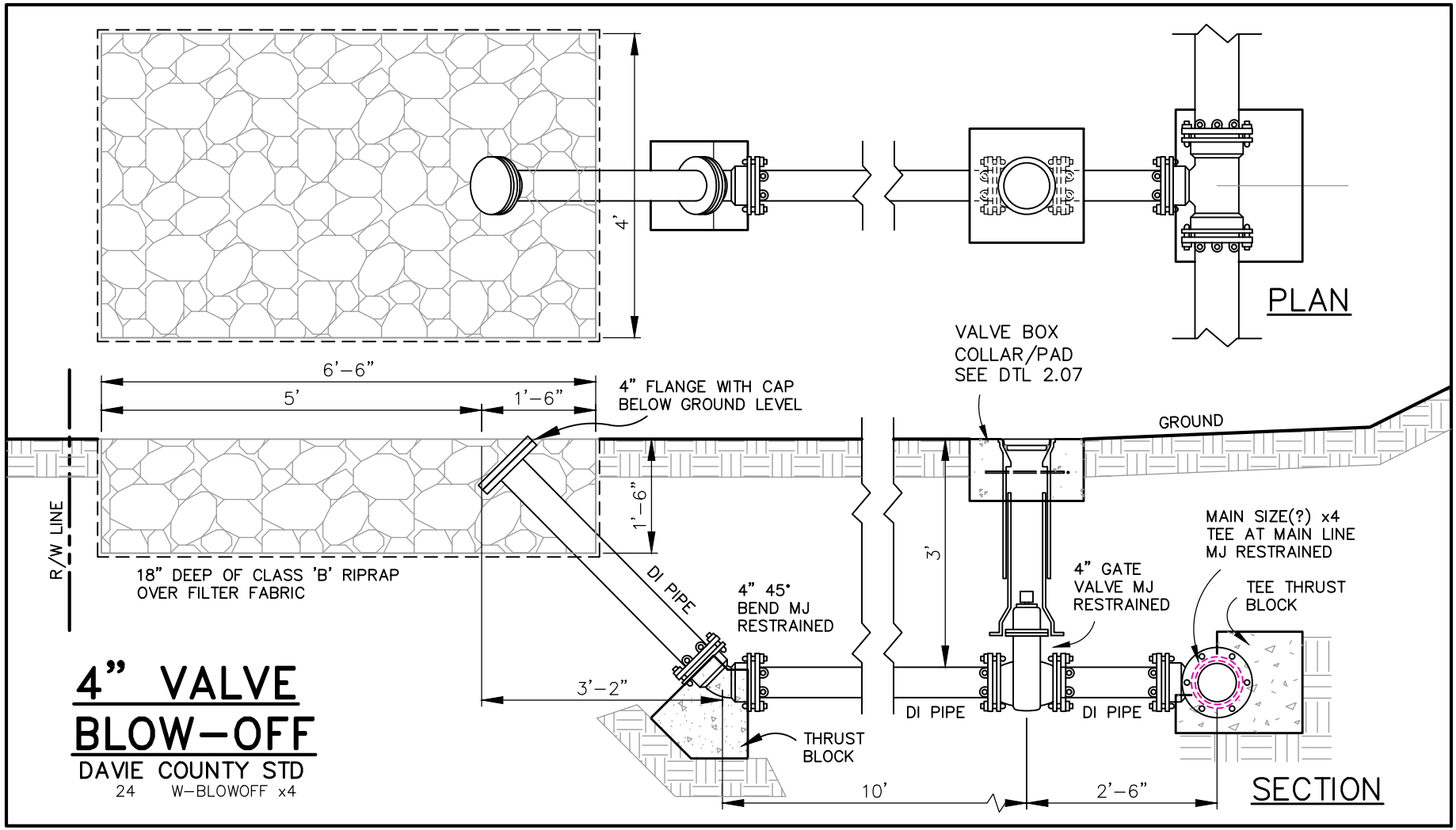

4" VALVE BLOW-OFF

DAVIE COUNTY STD

24 W-BLOWOFF x4

PAGE 10

SHEET: 1 OF 1 05/20/20 GSB

2.10

4" BLOW-OFF

DAVIE COUNTY PUBLIC UTILITIES

daviecountyNC.gov (336)753-6090

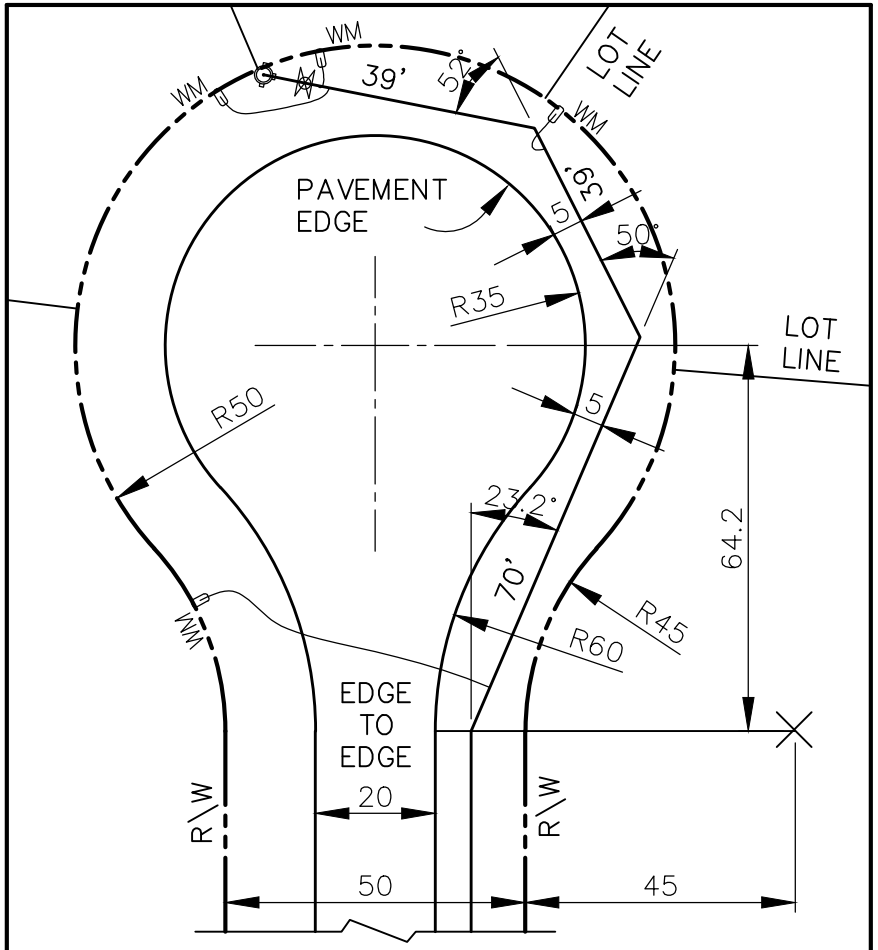

WATER LAYOUT#1 IN 35' RAD CUL-DE-SAC

40 W-LAYOUT#1 RDCUL50_50-35 NOT TO SCALE

NOTES:

1. CUL-DE-SAC DIMENSIONS MAY VARY.
2. WATER MAIN SHALL NOT BE PLACED UNDER PAVEMENT.

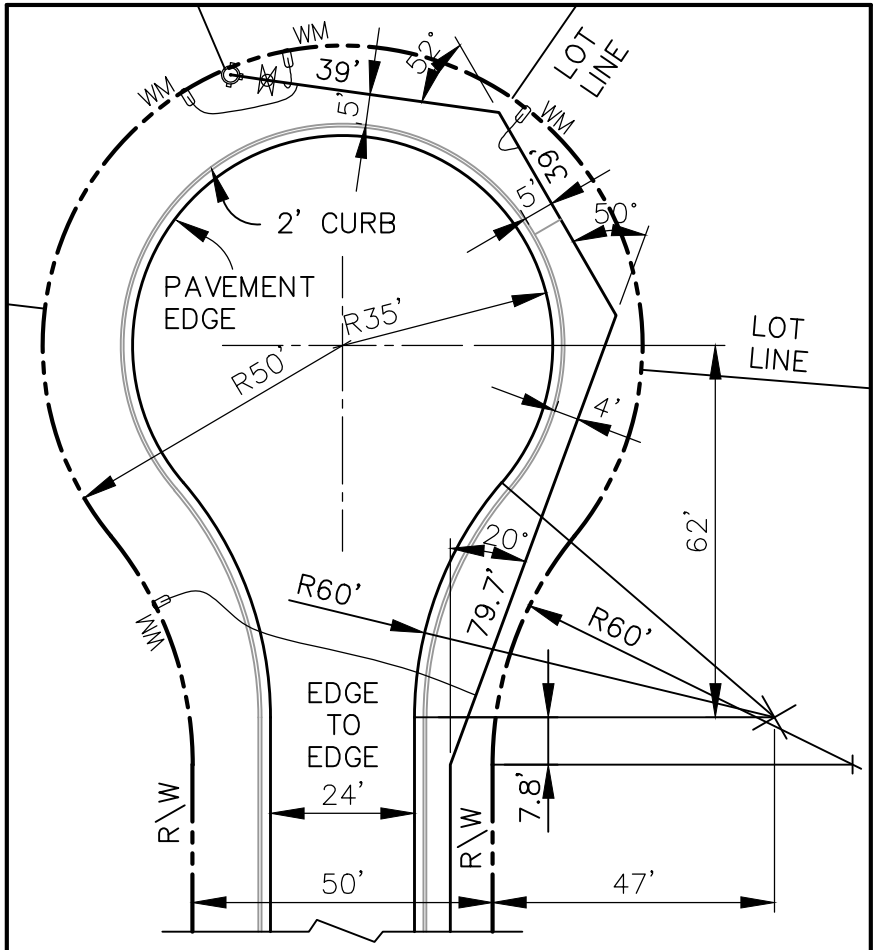

WATER LAYOUT#2 IN 37' RAD CUL-DE-SAC

40 W-LAYOUT#2 RDCUL50_50-37 NOT TO SCALE

NOTES:

1. CUL-DE-SAC DIMENSIONS MAY VARY.
2. WATER MAIN SHALL NOT BE PLACED UNDER PAVEMENT.

SHEET: 1 OF 1 05/20/20 GSB

2.11

WATER MAIN LAYOUT OPTIONS IN CUL-DE-SAC

DAVIE COUNTY PUBLIC UTILITIES
daviecountyNC.gov (336)753-6090

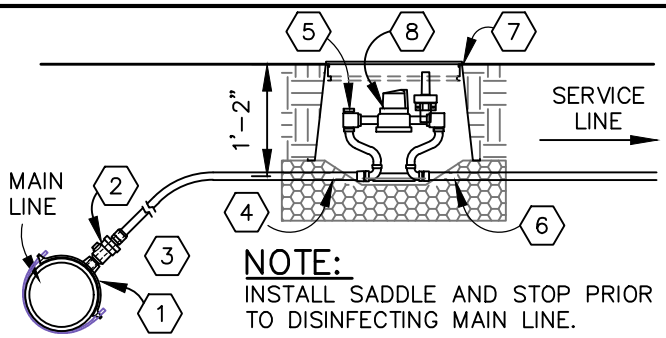

NOTE:
INSTALL SADDLE AND STOP PRIOR TO DISINFECTING MAIN LINE.

WATER SERVICE MATERIAL

1. TAP TO MAIN: DRESSER #194 3/4" CC THREADS.
2. CORP. STOP: MUELLER H-15006 INSTA-TITE.
3. SERVICE PIPE: 3/4" 200 PSI SDR-9 CTS PE
4. FITTING: MUELLER H-14230 INSTA-TITE.
5. METER YOKE: MUELLER 5/8x3/4 B-2404R-2AN 7" HGT. WITH 300 PSI BALL ANGLE VALVE
6. FITTING: MUELLER H-14222 F.I.P.
7. METER BOX: 14x19x12 PLASTIC BOX W/ HEAVY DUTY CAST IRON LID EQUAL TO 'NDS' D1200-CI SET TO GRADE ON 6 BRICKS.
8. METER: MUELLER HERSEY 5/8x3/4 420 SI, IB, ME8 (MI.NET NODE AMR) IN GALS.

3/4" WATER SERVICE

DAVIE COUNTY STD 24 W-MTR DC 300

DAVIE COUNTY PUBLIC UTILITIES
(336)753-6090
daviecountyNC.gov

0.75" WATER SERVICE

SHEET: 1 OF 1 05/20/20 GSB
3.01
PAGE 1

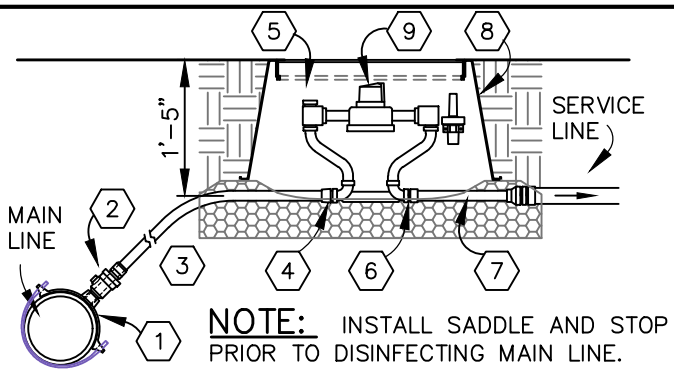

NOTE: INSTALL SADDLE AND STOP PRIOR TO DISINFECTING MAIN LINE.

MATERIAL KEYNOTES

1. TAP TO MAIN: DRESSER #194 1" CC THREADS
2. CORP. STOP: MUELLER H15006
3. PIPE: 1" 200 PSI SDR-9 CTS PE
4. FITTING: MUELLER H14230
5. METER YOKE: MUELLER 1" B-2404R-2AN 10" HGT. WITH 300 PSI BALL ANGLE VALVE
6. FITTING: MUELLER H14222
7. OUTLET PIPE: TYPE "K" COPPER PIPE
8. METER BOX: 13X24X15 PLASTIC BOX & LID EQUAL TO 'NDS' PRO 125BCDWB SET TO GRADE ON 6 BRICKS.
9. METER: MUELLER HERSEY 452B ME8 (MI.NET NODE AMR) IN GALS.

1" WATER SERVICE

DAVIE COUNTY STD 24 W-MTR1 DC 300

DAVIE COUNTY PUBLIC UTILITIES
(336)753-6090
daviecountyNC.gov

1" WATER SERVICE

PAGE 2
SHEET: 1 OF 1 05/20/20 GSB
3.02

1.5" WATER METER

24

W-MTR1.5 DC 300

MATERIAL KEYNOTES

1. PIPE: 1.5" TYPE 'K' COPPER
2. COUPLING: IPT-COMP
3. COUPLING: COMP-IPT

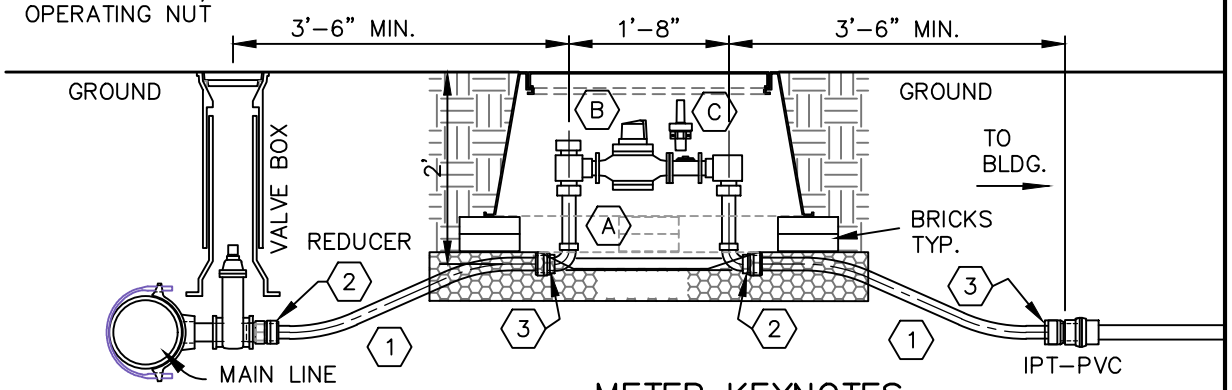

NOTES:

1. INSTALL SADDLE AND VALVE PRIOR TO DISINFECTING MAIN LINE.
2. SET METER BOX TO GRADE ON 12 BRICKS. (TWO BRICKS HIGH UNDER CORNERS & LONG SIDES)

METER KEYNOTES

A. SETTER: MUELLER 1.5" B2423-2N 12" HGT. WITH 300 PSI BALL ANGLE VALVE INLET, ANGLE CHECK VALVE OUTLET AND BALL VALVE BYPASS

B. METER BOX: 17x30x18 PLASTIC BOX & LID EQUAL TO 'NDS' PRO 126BCDWB

C. METER: MUELLER FLANGED MVR100 WITH ME8 (MI.NET NODE AMR) IN GALS.

1.5" WATER SERVICE

DAVIE COUNTY PUBLIC UTILITIES

daviecountyNC.gov (336)753-6090

2" WATER METER

24

W-MTR2 DC 300

MATERIAL KEYNOTES

1. PIPE: 2" TYPE 'K' COPPER
2. COUPLING: IPT-COMP
3. COUPLING: COMP-IPT

2" IPT DRESSER TAP, BRASS NIPPLE & 2" GATE VALVE W/ SQ. OPERATING NUT

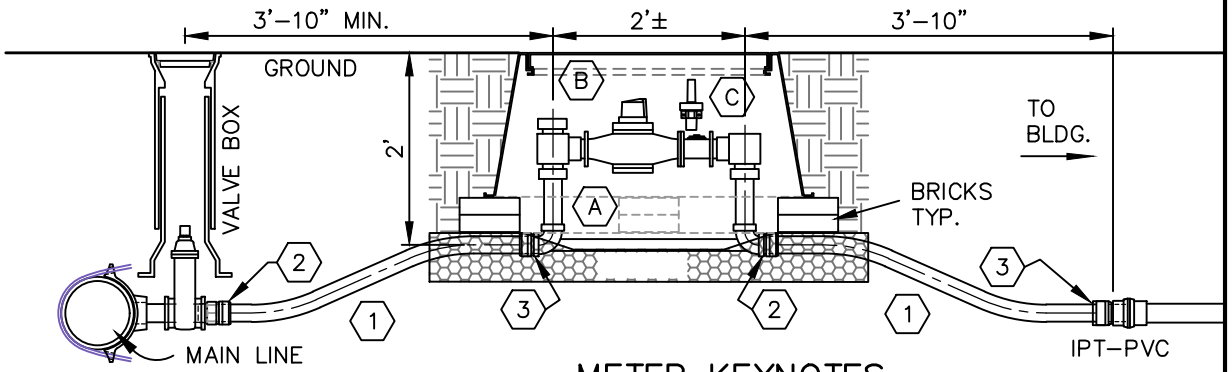

NOTES:

1. INSTALL SADDLE AND VALVE PRIOR TO DISINFECTING MAIN LINE.
2. SET METER BOX TO GRADE ON 12 BRICKS (TWO BRICKS HIGH UNDER CORNERS & LONG SIDES)

METER KEYNOTES

A. SETTER: MUELLER 2" B2423-2N 12" HGT. WITH 300 PSI BALL ANGLE VALVE INLET, ANGLE CHECK VALVE OUTLET AND BALL VALVE BYPASS

B. METER BOX: 17x30x18 PLASTIC BOX & LID EQUAL TO 'NDS' PRO 126BCDWB

C. METER: MUELLER FLANGED MVR160 WITH ME8 (MI.NET NODE AMR) IN GALS.

2" WATER SERVICE

DAVIE COUNTY PUBLIC UTILITIES

daviecountyNC.gov (336)753-6090

NOTES:

1. INSTALL SADDLE AND VALVE PRIOR TO DISINFECTING MAIN LINE.
2. PROVIDE BRASS OR COOPER

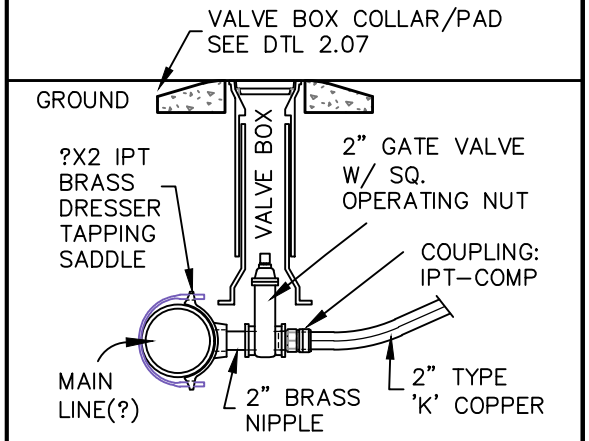

2" WATER SERVICE CONNECTION

24 W-SRVC2 CON DC

NOTES:

1. INSTALL SADDLE AND VALVE PRIOR TO DISINFECTING MAIN LINE.

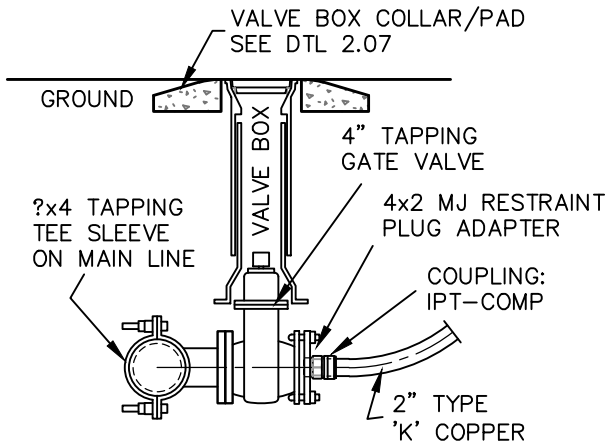

3" WATER SERVICE W/ 4" TAP & 2" METER

24 W-SRVC3 4TAP+2MTR

NOTES:

1. INSTALL SADDLE AND VALVE PRIOR TO DISINFECTING MAIN LINE.
2. PROVIDE MJ RESTRAINT

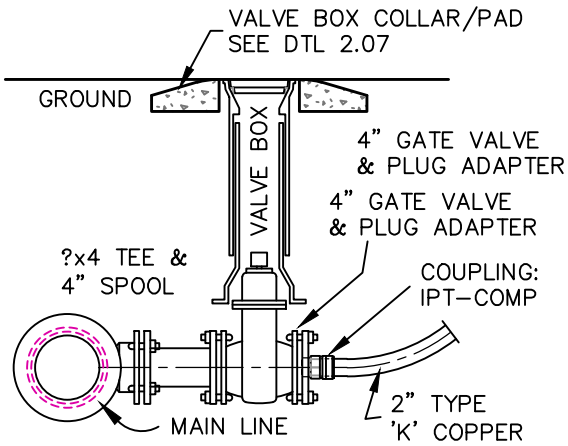

3" WATER SERVICE W/ 2" METER IN NEW MAIN

24 W-SRVC3 4VAL+2MTR NEW DC

PAGE 5

SHEET: 1 OF 1 05/20/20 GSB

3.05

WATER SERVICE CONNECTIONS FOR 2" AND 3" WITH 2" METER

DAVIE COUNTY PUBLIC UTILITIES
daviecountyNC.gov (336)753-6090

RESERVE

DAVIE COUNTY PUBLIC UTILITIES
daviecountyNC.gov
(336)753-6090

PAGE 6
SHEET: 1 OF 1 05/20/20
GSB
3.06

MATERIAL KEYNOTES

1. PIPE: 2" TYPE 'K' COPPER (USE 'STICK' PIPE ONLY FOR STRAIGHT SECTIONS SHOWN)
2. COUPLING: IPT–COMP
3. COUPLING: COMP–IPT
4. COUPLING: COMP–COMP

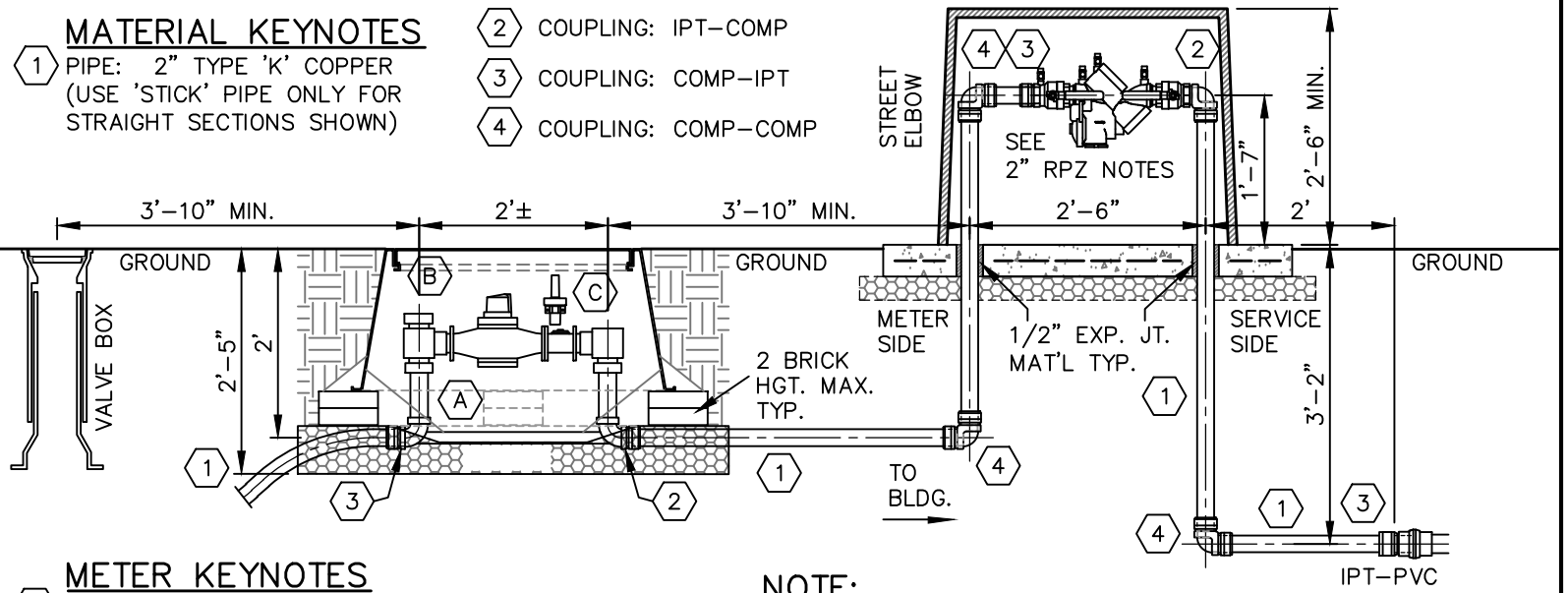

METER KEYNOTES

A. SETTER: MUELLER 2" B2423–2N 12" HGT. WITH 300 PSI BALL ANGLE VALVE INLET, ANGLE CHECK VALVE OUTLET AND BALL VALVE BYPASS

B. METER BOX: 17x30x18 PLASTIC BOX & LID EQUAL TO 'NDS' PRO 126BCDWB

C. METER: MUELLER FLANGED MVR160 WITH ME8 (MI.NET NODE AMR) IN GALS.

NOTE:

SET METER BOX TO GRADE ON 12 BRICKS. (TWO BRICKS HIGH UNDER CORNERS & LONG SIDES) A 2" BRICK PROJECTION MAXIMUM INTO THE METER SPACE.

2 WATER METER & 2" RPZ

24 W–MTR2 +RPZ2 DC

2" RPZ NOTES:

1. BACKFLOW PREVENTER LOCATION REQUIRES PRIOR APPROVAL, MUST BE ON THE PROPERTY SIDE AND MUST NOT OBSTRUCT SIGHT DISTANCE. PROVIDE 36" CLEAR OUTSIDE OF ENCLOSURE ON ALL SIDES.

2. SLAB SHALL BE 3000 PSI CONCRETE, 51"LONG x 25"WIDE x 4"THICK WITH 6x6-W1.4XW1.4 WWF OVER 3" COMPACTED CRUSHED STONE.

3. REDUCED PRESSURE BACKFLOW PREVENTER SHALL BE A **'WATTS' 2" 909M1-QT** (OR EQUAL). SHUT-OFF VALVES SHALL BE FULL PORT, LINE SIZE AND 1/4 TURN BRONZE UNION BALL VALVES. NO BY-PASS WILL BE ACCEPTED.

4. PIPE RISERS AND BENDS SHALL BE 'STICK' TYPE 'K' COPPER OR BRASS FOR A MINIMUM OF 5 FT EACH SIDE OF VALVES.

5. THE ABOVE GROUND ENCLOSURE SHALL BE **'HOT-BOX' #HF013039028** (OR EQUAL) FIBERGLASS, INSULATED TO R8, HAVE A FLIP-TOP ACCESS, LOCKABLE SS HASP & (2)TWO DRAIN PORTS AT GRADE. COLOR BEIGE.

6. PROVIDE GFI RECEPTACLE MOUNTED 21" MINIMUM ABOVE THE SLAB.

7. THE ENCLOSURE SHALL BE HEATED WITH A 90W, 120V, 18 FT LONG HEAT TRACE CABLE.

DAVIE COUNTY PUBLIC UTILITIES
(336)753-6090
daviecountyNC.gov

2" WATER METER & 2" RPZ

SHEET: 2 OF 2 05/20/20 GSB

3.08

PAGE 8

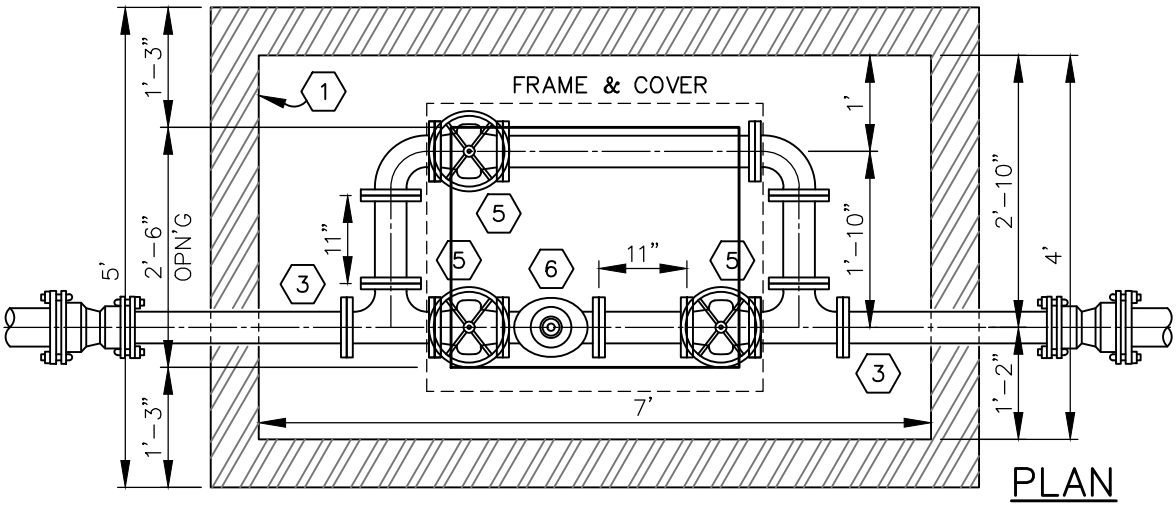

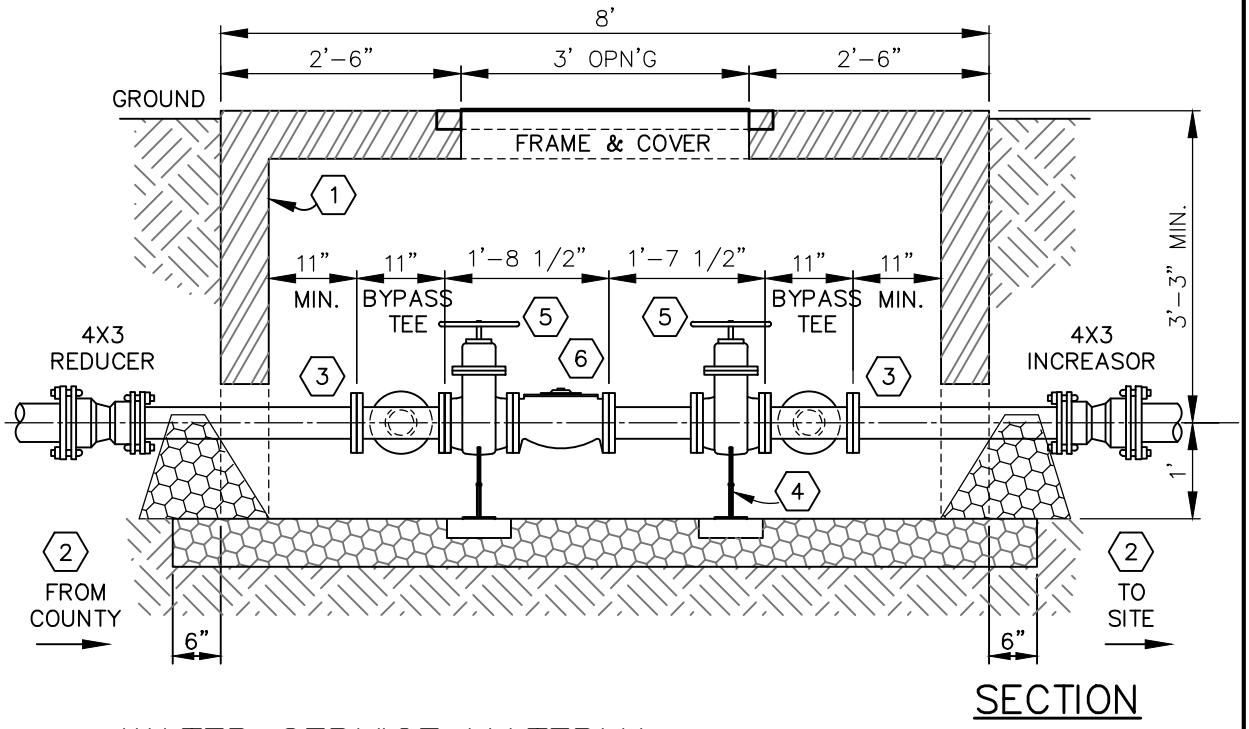

WATER SERVICE MATERIAL

1. METER VAULT: STAY-RIGHT TANK CO. 7'x4' (INSIDE), PRECAST REINFORCED CONCRETE VAULT FOR HEAVY TRAFFIC WITH 2.5'x3' ALUMINUM ACCESS HATCH EQUAL TO HALLIDAY S1S3036. ALLOW 3" CLEAR BETWEEN PIPE AND VAULT.
2. WATER PIPE: CLASS 350 DUCTILE IRON PIPE INTO AND OUT OF CONCRETE VAULT. MAKE TRANSITION TO PVC PIPE OUTSIDE VAULT.
3. FLANGE TRANSITION COUPLING.
4. ADJUSTABLE PIPE SUPPORT: GRINNELL OR EQUAL AT EACH VALVE AS SHOWN WITH MINIMUM THREE BRICKS WIDE UNDER EACH SUPPORT.
5. VALVES: BRONZE NFS, OCC, AWWA GATE VALVES.
6. METER: 3" MUELLER MODEL MVR350 WITH ME8 (MI.NET NODE AMR) IN GALS.

3" WATER METER VAULT IN 4" MAIN

DAVIE COUNTY STD. 24 W-MTR3+BYPASS 4MAIN DC 300

DAVIE COUNTY PUBLIC UTILITIES
(336)753-6090
daviecountyNC.gov

3" WATER METER VAULT IN 4" MAIN

05/20/20 GSB

SHEET: 1 OF 1 3.09

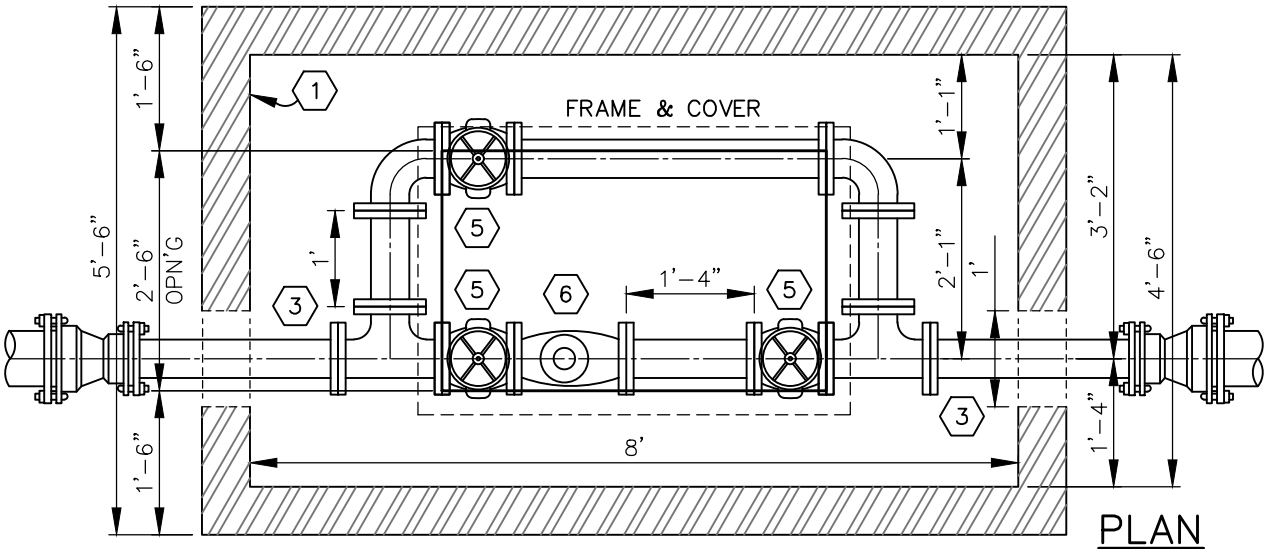

PLAN

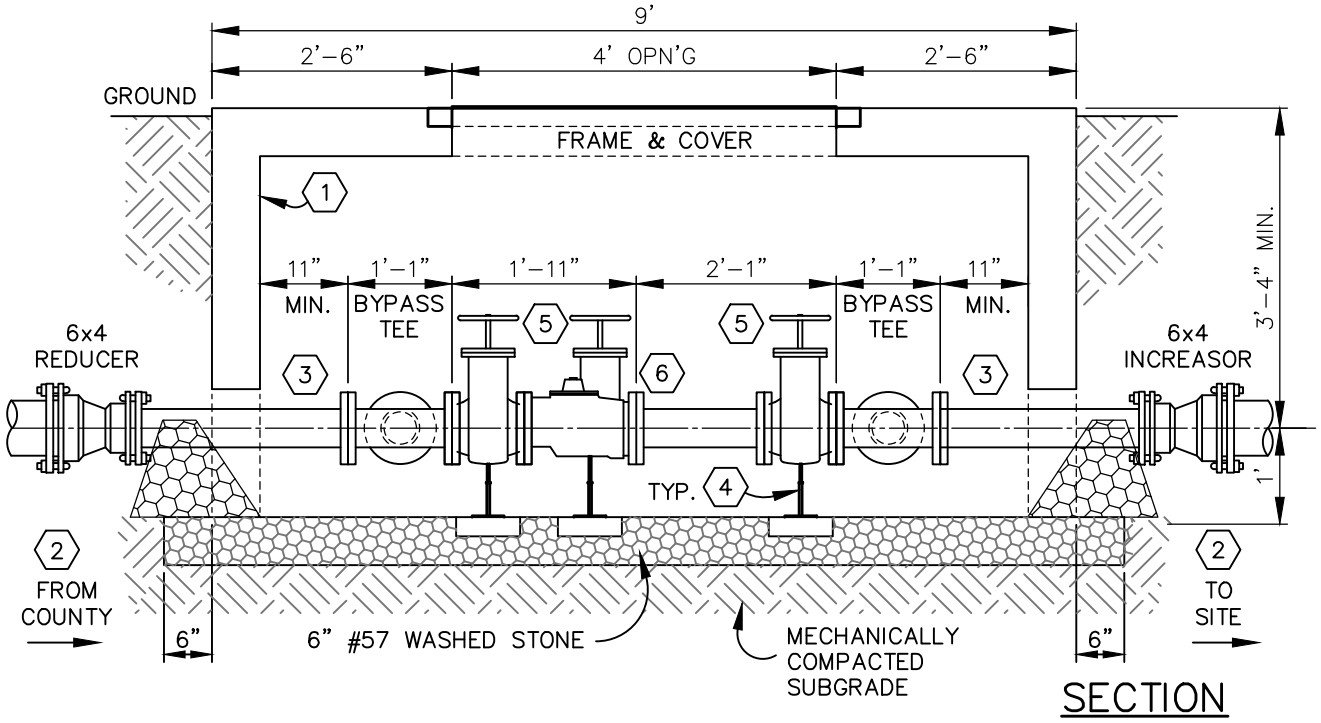

SECTION

WATER SERVICE MATERIAL

1. METER VAULT: STAY-RIGHT TANK CO. 8'x4.5' (INSIDE), PRECAST REINFORCED CONCRETE VAULT FOR HEAVY TRAFFIC WITH 2.5'x4' ALUMINUM ACCESS HATCH EQUAL TO HALLIDAY S1S3048. ALLOW 3" CLEAR BETWEEN PIPE AND VAULT.
2. WATER PIPE: CLASS 350 DUCTILE IRON PIPE INTO AND OUT OF CONCRETE VAULT. MAKE TRANSITION TO PVC PIPE OUTSIDE VAULT.
3. FLANGE TRANSITION COUPLING.
4. ADJUSTABLE PIPE SUPPORT: GRINNELL OR EQUAL AT EACH VALVE AS SHOWN WITH MINIMUM THREE BRICKS WIDE UNDER EACH SUPPORT.
5. VALVES: BRONZE NFS, OCC, AWWA GATE VALVES.
6. METER: 4" MUELLER MODEL MVR650 WITH ME8 (MI.NET NODE AMR) IN GALS.

4" WATER METER VAULT IN 6" MAIN

DAVIE COUNTY STD. 24 W-MTR4+BYPASS 6MAIN DC

DAVIE COUNTY PUBLIC UTILITIES
(336)753-6090
daviecountyNC.gov

4" WATER METER VAULT IN 6" MAIN

05/20/20
GSB

SHEET: 1 OF 1
3.10

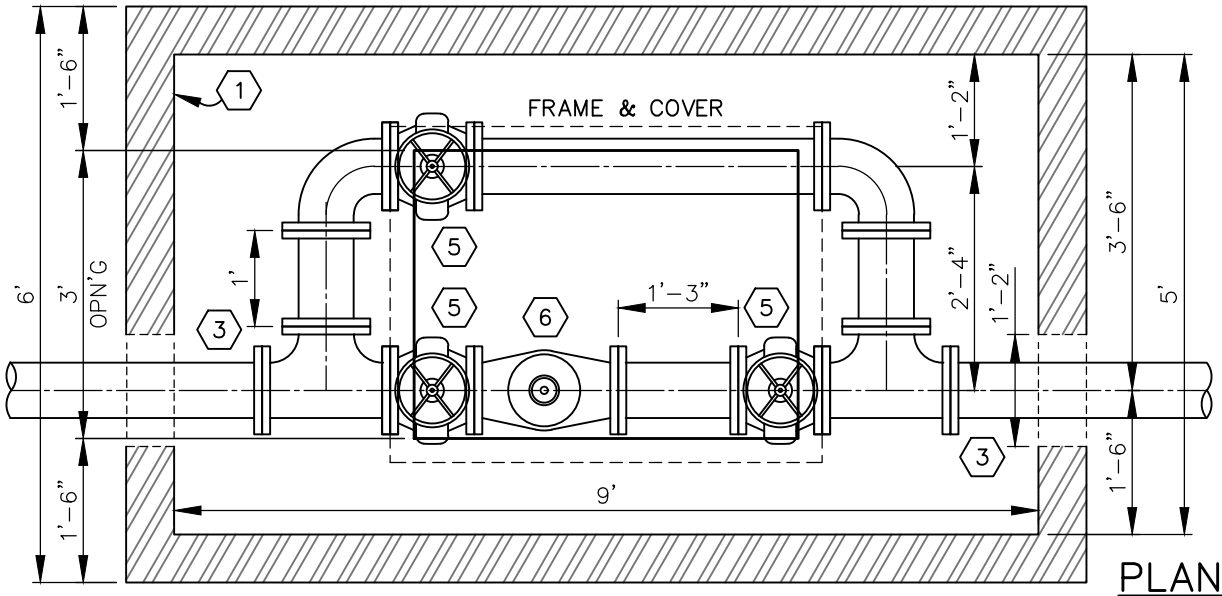

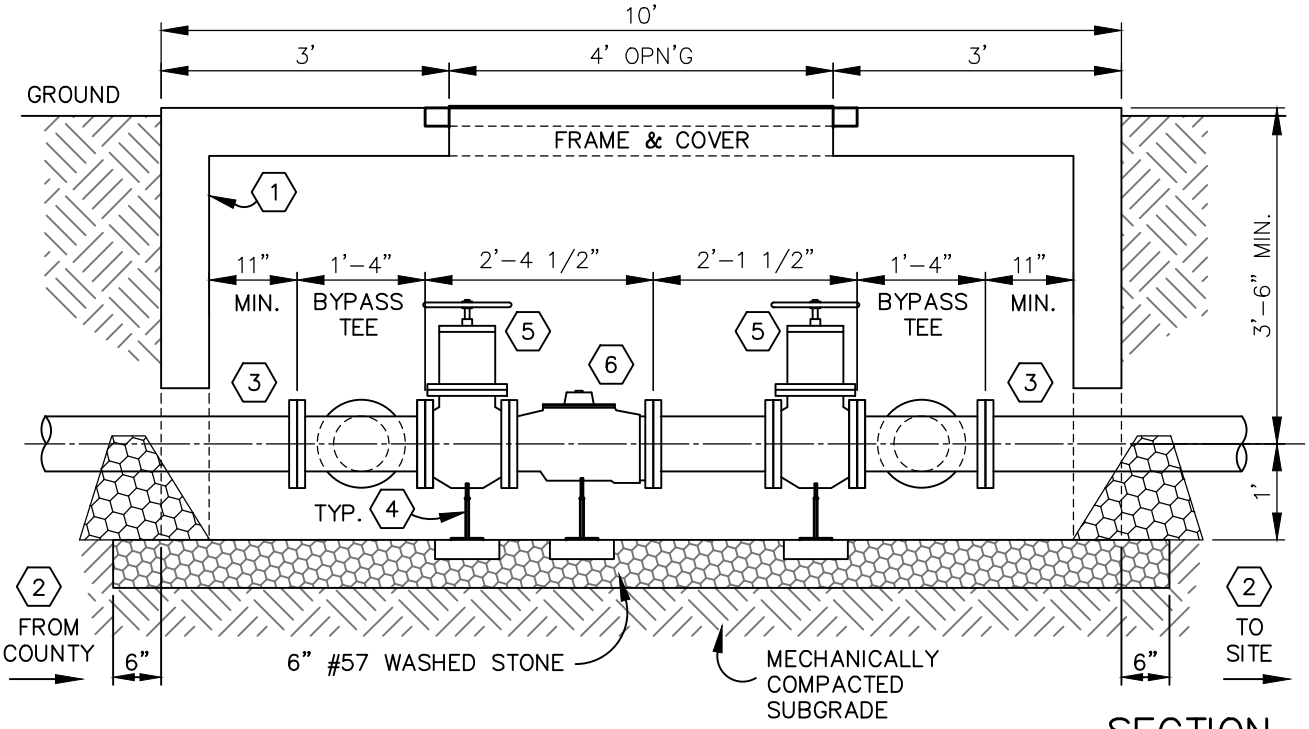

WATER METER MATERIAL

1. METER VAULT: STAY-RIGHT TANK CO. 9'x5' (INSIDE), PRECAST REINFORCED CONCRETE VAULT FOR HEAVY TRAFFIC WITH 3'x4' ALUMINUM ACCESS HATCH EQUAL TO HALLIDAY S1S3648. ALLOW 3" CLEAR BETWEEN PIPE AND VAULT.
2. WATER PIPE: CLASS 350 DUCTILE IRON PIPE INTO AND OUT OF CONCRETE VAULT. MAKE TRANSITION TO PVC PIPE OUTSIDE VAULT.
3. FLANGE TRANSITION COUPLING.
4. ADJUSTABLE PIPE SUPPORT: GRINNELL OR EQUAL AT EACH VALVE AS SHOWN WITH MINIMUM THREE BRICKS WIDE UNDER EACH SUPPORT.
5. VALVES: BRONZE NFS, OCC, AWWA GATE VALVES.
6. METER: 6" MUELLER MODEL MVR1300 WITH ME8 (MI.NET NODE AMR) IN GALS.

6" WATER METER VAULT

DAVIE COUNTY STD. 24 W-MTR6+BYPASS DC 300

DAVIE COUNTY PUBLIC UTILITIES
(336)753-6090
daviecountyNC.gov

6" WATER METER VAULT

05/20/20
GSB

PAGE 11
SHEET: 1 OF 1
3.11

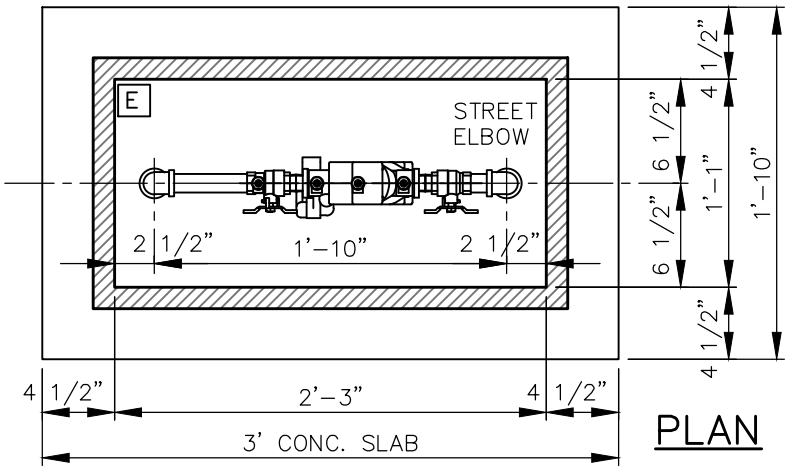

PLAN

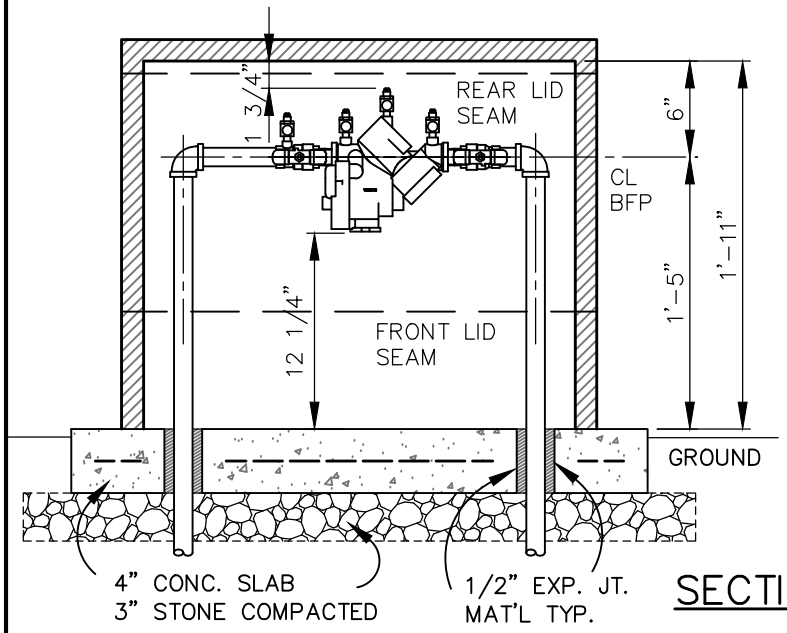

SECTION

NOTES:

1. ALL DIMENSIONS ARE APPROXIMATE.
2. BACKFLOW PREVENTER LOCATION REQUIRES PRIOR APPROVAL, MUST BE WITHIN 10 FT OF METER ON THE PROPERTY SIDE AND MUST NOT OBSTRUCT SIGHT DISTANCE. PROVIDE 36" CLEAR OUTSIDE OF ENCLOSURE ON ALL SIDES.
3. SLAB SHALL BE 3000 PSI CONCRETE, 36"LONG x 22"WIDE x 4"THICK WITH 6x6-W1.4XW1.4 WWF OVER 3" COMPACTED CRUSHED STONE.
4. REDUCED PRESSURE BACKFLOW PREVENTER SHALL BE A **'WATTS' 3/4" 909-QT** (OR EQUAL). SHUT-OFF VALVES SHALL BE FULL PORT, LINE SIZE AND 1/4 TURN BRONZE UNION BALL VALVES.
5. PIPE RISERS AND BENDS SHALL BE 'STICK' TYPE 'K' COPPER OR BRASS FOR A MINIMUM OF 5 FT EACH SIDE OF VALVES.
6. THE ENCLOSURE SHALL BE A **'HOT-BOX' #HF013027023** (OR EQUAL) FIBERGLASS AND HAVE A FLIP-TOP ACCESS, LOCKABLE SS HASP & (2)TWO DRAINPORTS AT GRADE. COLOR BEIGE.
7. REQUIRED ELECTRICAL RECEPTACLE INDICATED BY E SHALL BE MOUNTED A MINIMUM OF 16" ABOVE THE SLAB.
8. THE ENCLOSURE SHALL BE HEATED WITH A 60W, 120V, 12 FT LONG HEAT TRACE CABLE.

3/4" REDUCED PRESSURE BACKFLOW PREVENTER

12

W-BX_RPBFP HB1 075 909-QT

PAGE 1

SHEET: 1 OF 1 05/20/20 GSB

4.01

0.75" REDUCED PRESSURE BACKFLOW PREVENTER

DAVIE COUNTY PUBLIC UTILITIES
daviecountyNC.gov (336)753-6090

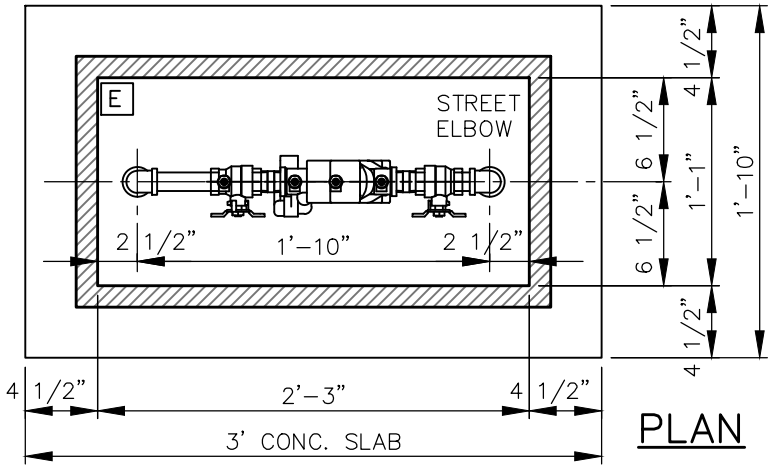

PLAN

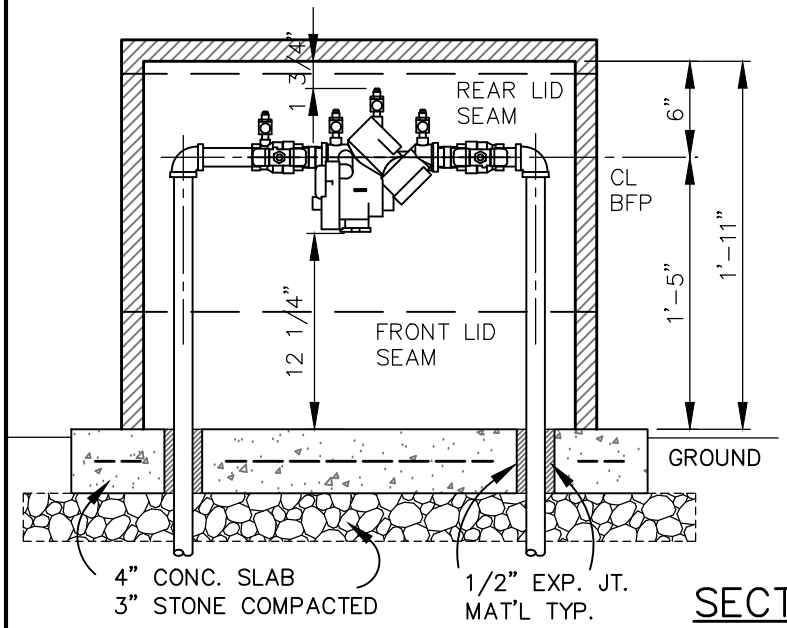

SECTION

NOTES:

1. ALL DIMENSIONS ARE APPROXIMATE.
2. BACKFLOW PREVENTER LOCATION REQUIRES PRIOR APPROVAL, MUST BE WITHIN 10 FT OF METER ON THE PROPERTY SIDE AND MUST NOT OBSTRUCT SIGHT DISTANCE. PROVIDE 36" CLEAR OUTSIDE OF ENCLOSURE ON ALL SIDES.
3. SLAB SHALL BE 3000 PSI CONCRETE, 36"LONG x 22"WIDE x 4"THICK WITH 6x6-W1.4XW1.4 WWF OVER 3" COMPACTED CRUSHED STONE.
4. REDUCED PRESSURE BACKFLOW PREVENTER SHALL BE A **'WATTS' 1" 909-QT** (OR EQUAL). SHUT-OFF VALVES SHALL BE FULL PORT, LINE SIZE AND 1/4 TURN BRONZE UNION BALL VALVES.
5. PIPE RISERS AND BENDS SHALL BE TYPE 'K' COPPER OR BRASS FOR A MINIMUM OF 5 FT EACH SIDE OF VALVES.
6. THE ENCLOSURE SHALL BE A **'HOT-BOX' #HF013027023** (OR EQUAL) FIBERGLASS AND HAVE A FLIP-TOP ACCESS, LOCKABLE SS HASP & (2)TWO DRAINPORTS.
7. REQUIRED ELECTRICAL RECEPTACLE INDICATED BY E SHALL BE MOUNTED A MINIMUM OF 16" ABOVE THE SLAB.
8. THE ENCLOSURE SHALL BE HEATED WITH A 60W, 120V, 12 FT LONG HEAT TRACE CABLE.

1" REDUCED PRESSURE BACKFLOW PREVENTER

12

W-BX_RPBFP HB1 100 909-QT

PAGE 2

SHEET: 1 OF 1 05/20/20 GSB

4.02

1" REDUCED PRESSURE BACKFLOW PREVENTER

DAVIE COUNTY PUBLIC UTILITIES
daviecountyNC.gov (336)753-6090

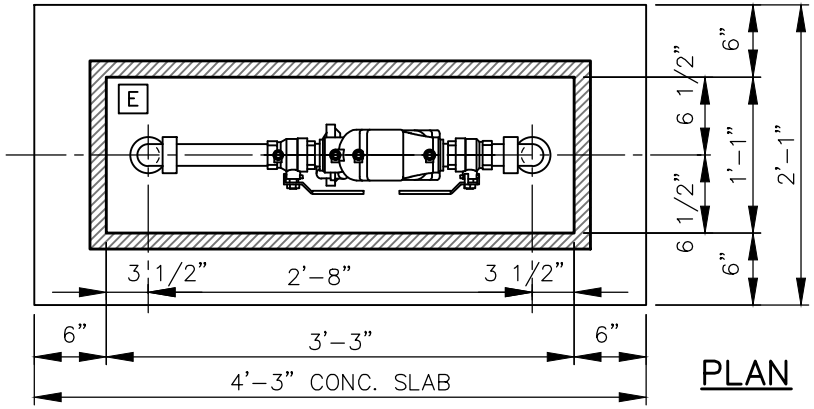

PLAN

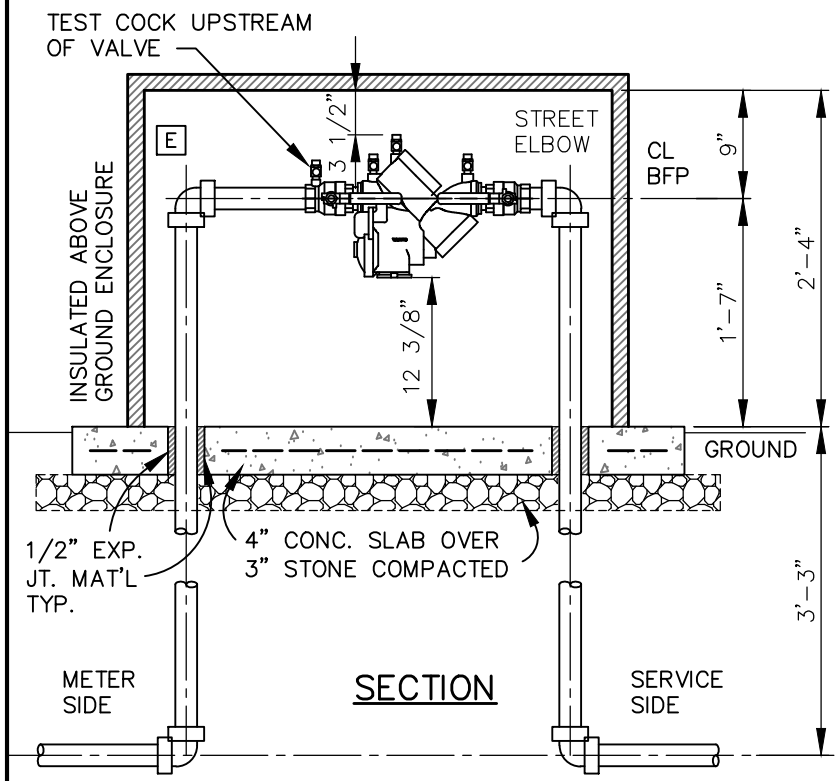

SECTION

NOTES:

1. ALL DIMENSIONS ARE APPROXIMATE.
2. BACKFLOW PREVENTER LOCATION REQUIRES PRIOR APPROVAL, MUST BE WITHIN 10 FT OF METER ON THE PROPERTY SIDE AND MUST NOT OBSTRUCT SIGHT DISTANCE. PROVIDE 36" CLEAR OUTSIDE OF ENCLOSURE ON ALL SIDES.
3. SLAB SHALL BE 3000 PSI CONCRETE, 51"LONG x 25"WIDE x 4"THICK WITH 6x6-W1.4XW1.4 WWF OVER 3" COMPACTED CRUSHED STONE.
4. REDUCED PRESSURE BACKFLOW PREVENTER SHALL BE A **'WATTS' 1.5" 909M1-QT** (OR EQUAL). SHUT-OFF VALVES SHALL BE FULL PORT, LINE SIZE AND 1/4 TURN BRONZE UNION BALL VALVES.
5. PIPE RISERS AND BENDS SHALL BE TYPE 'K' COPPER OR BRASS FOR A MINIMUM OF 5 FT EACH SIDE OF VALVES.
6. THE ENCLOSURE SHALL BE A **'HOT-BOX' #HF013039028** (OR EQUAL) FIBERGLASS AND HAVE A FLIP-TOP ACCESS, LOCKABLE SS HASP & (2)TWO DRAINPORTS. COLOR BEIGE.
7. NO BY-PASS OF BACKFLOW PREVENTER WILL BE ACCEPTED.
8. REQUIRED ELECTRICAL RECEPTACLE INDICATED BY E SHALL BE GFI MOUNTED A MINIMUM OF 30" ABOVE THE SLAB.
9. THE ENCLOSURE SHALL BE HEATED WITH A 90W, 120V, 18 FT LONG HEAT TRACE CABLE.

1.5" REDUCED PRESSURE BACKFLOW PREVENTER

16

W-BX_RPBFP HB2 150 909M1-QT

PAGE 3

SHEET: 1 OF 1 05/20/20 GSB

4.03

1.5" REDUCED PRESSURE BACKFLOW PREVENTER

DAVIE COUNTY PUBLIC UTILITIES
daviecountyNC.gov (336)753-6090

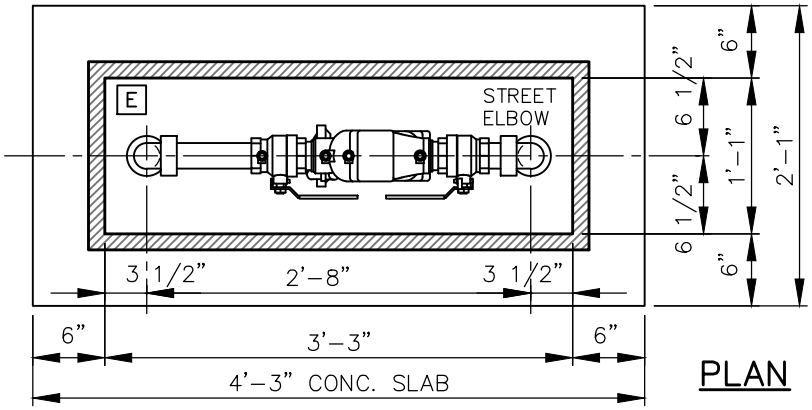

PLAN

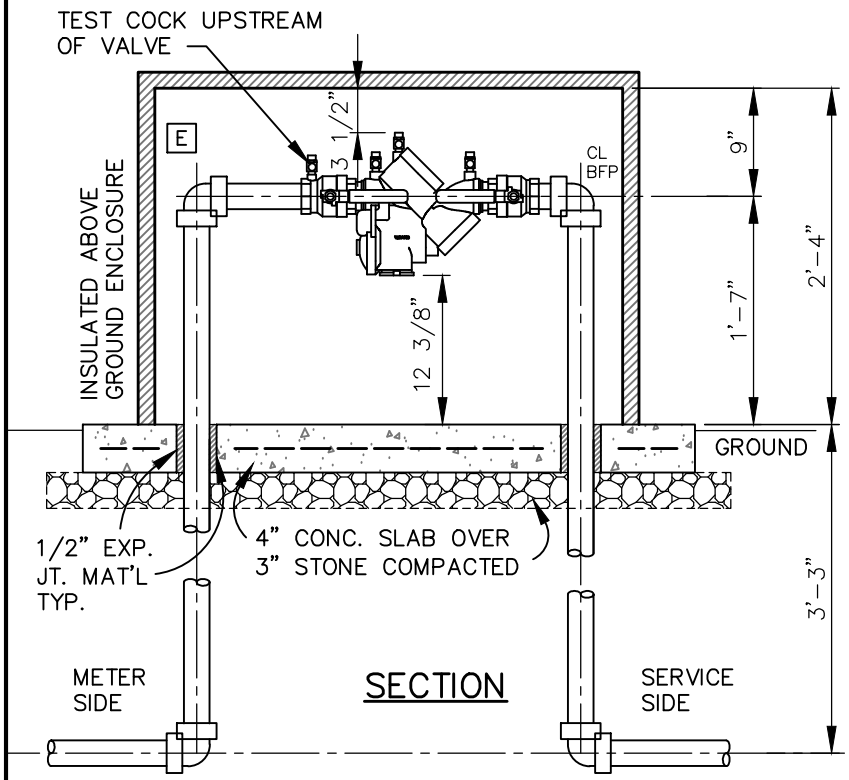

SECTION

NOTES:

1. ALL DIMENSIONS ARE APPROXIMATE.
2. BACKFLOW PREVENTER LOCATION REQUIRES PRIOR APPROVAL, MUST BE WITHIN 10 FT OF METER ON THE PROPERTY SIDE AND MUST NOT OBSTRUCT SIGHT DISTANCE. PROVIDE 36" CLEAR OUTSIDE OF ENCLOSURE ON ALL SIDES.
3. SLAB SHALL BE 3000 PSI CONCRETE, 51"LONG x 25"WIDE x 4"THICK WITH 6x6-W1.4XW1.4 WWF OVER 3" COMPACTED CRUSHED STONE.
4. REDUCED PRESSURE BACKFLOW PREVENTER SHALL BE A **'WATTS' 2" 909M1-QT** (OR EQUAL). SHUT-OFF VALVES SHALL BE FULL PORT, LINE SIZE AND 1/4 TURN BRONZE UNION BALL VALVES.
5. PIPE RISERS AND BENDS SHALL BE TYPE 'K' COPPER OR BRASS FOR A MINIMUM OF 5 FT EACH SIDE OF VALVES.
6. THE ENCLOSURE SHALL BE A **'HOT-BOX' #HF013039028** (OR EQUAL) FIBERGLASS AND HAVE A FLIP-TOP ACCESS, LOCKABLE SS HASP & (2)TWO DRAINPORTS AT GRADE. COLOR BIEGE.
7. NO BY-PASS OF BACKFLOW PREVENTER WILL BE ACCEPTED.
8. REQUIRED ELECTRICAL RECEPTACLE INDICATED BY E SHALL BE GFI MOUNTED A MINIMUM OF 21" ABOVE THE SLAB.
9. THE ENCLOSURE SHALL BE HEATED WITH A 90W, 120V, 18 FT LONG HEAT TRACE CABLE.

2" REDUCED PRESSURE BACKFLOW PREVENTER

16

W-BX_RPBFP HB2 200 909M1-QT

PAGE 4

SHEET: 1 OF 1 05/20/20 GSB

4.04

2" REDUCED PRESSURE BACKFLOW PREVENTER

DAVIE COUNTY PUBLIC UTILITIES
daviecountyNC.gov (336)753-6090

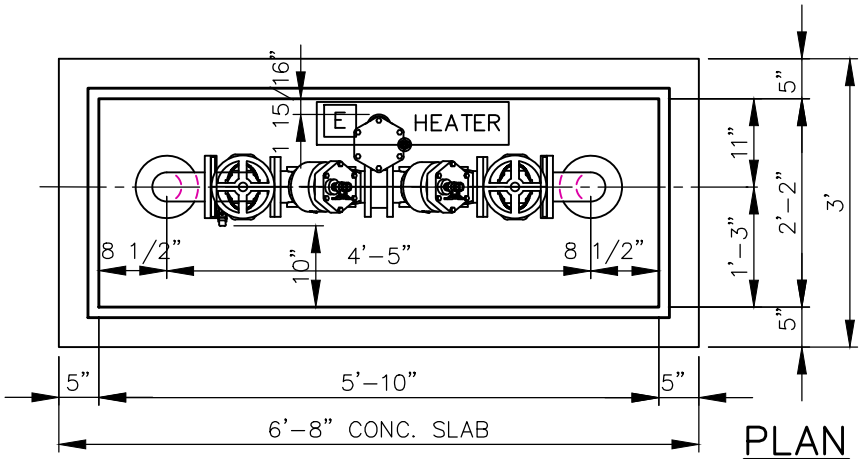

PLAN

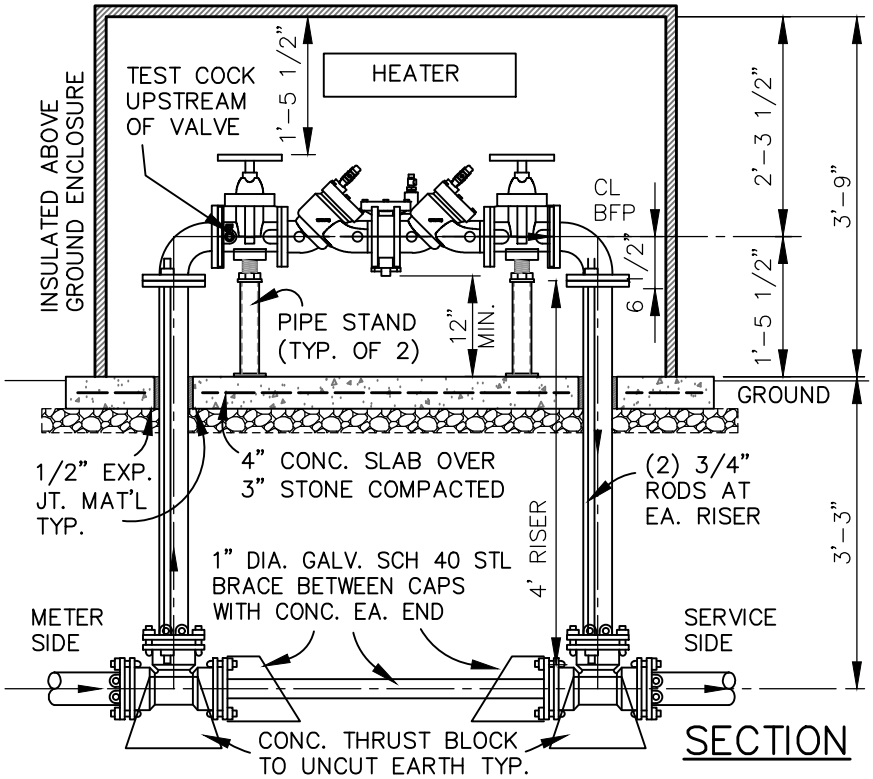

SECTION

NOTES:

1. ALL DIMENSIONS ARE APPROXIMATE.
2. BACKFLOW PREVENTER LOCATION REQUIRES PRIOR APPROVAL, MUST BE WITHIN 10 FT OF METER ON THE PROPERTY SIDE AND MUST NOT OBSTRUCT SIGHT DISTANCE. PROVIDE 36" CLEAR OUTSIDE OF ENCLOSURE ON ALL SIDES.
3. SLAB SHALL BE 3000 PSI CONCRETE, 80"LONG x 36"WIDE x 4"THICK WITH 6x6-W4XW4 WWF OVER 3" COMPACTED CRUSHED STONE.
4. REDUCED PRESSURE BACKFLOW PREVENTER (RP) SHALL BE A **'CLA-VAL' 3" RP-4** (OR EQUAL) WITH AWWA 'NRS' RESILIENT WEDGE GATE VALVES.
5. PIPE RISERS AND BENDS SHALL BE DUCTILE IRON FOR A MINIMUM OF 8 FT EACH SIDE OF GATE VALVES. ALL BELOW GROUND FITTINGS SHALL BE RESTRAINED MECHANICAL JOINTS.
6. THE ABOVE GROUND ENCLOSURE SHALL BE A **'HOT-BOX' #HF026070045** (OR EQUAL) FIBERGLASS, INSULATED TO R8, HAVE A FLIP-TOP ACCESS, LOCKABLE SS HASP & (2)TWO DRAINPORTS AT GRADE. COLOR BEIGE.
7. NO BY-PASS OF BACKFLOW PREVENTER WILL BE ACCEPTED.
8. REQUIRED ELECTRICAL RECEPTACLE INDICATED BY [E] SHALL BE A GFI MOUNTED A MINIMUM OF 30" ABOVE THE SLAB.
9. THE ENCLOSURE SHALL BE HEATED WITH A 1000W, 120V AND 1 PH HEATERS.

3" REDUCED PRESSURE BACKFLOW PREVENTER

24

W-BX_RPBFP HB3 3_RP-4

PAGE 5

SHEET: 1 OF 1 05/20/20 GSB

4.05

3" REDUCED PRESSURE BACKFLOW PREVENTER

DAVIE COUNTY PUBLIC UTILITIES
daviecountyNC.gov (336)753-6090

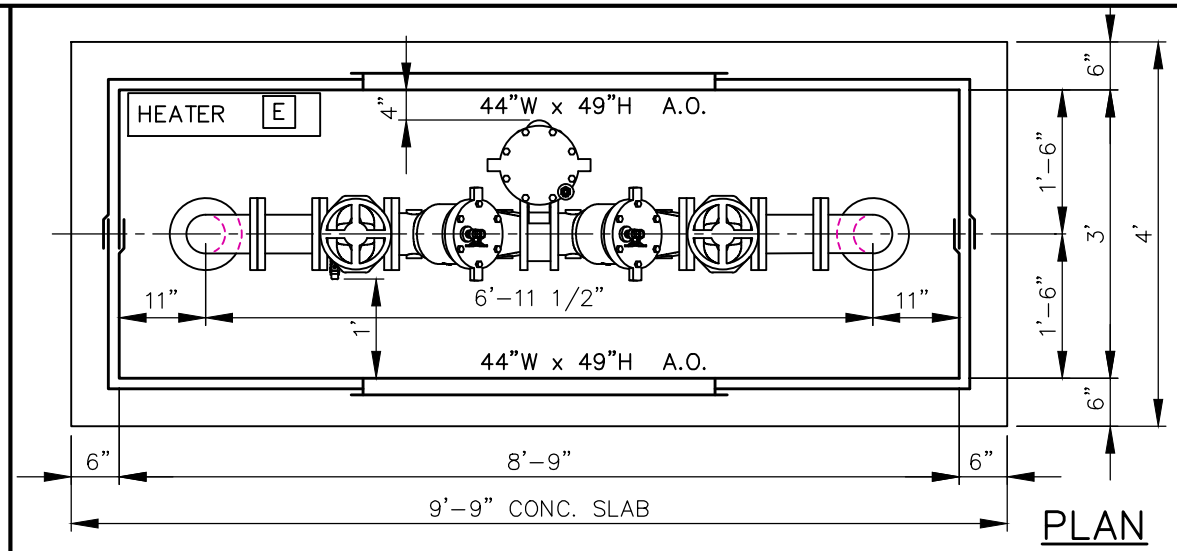

PLAN

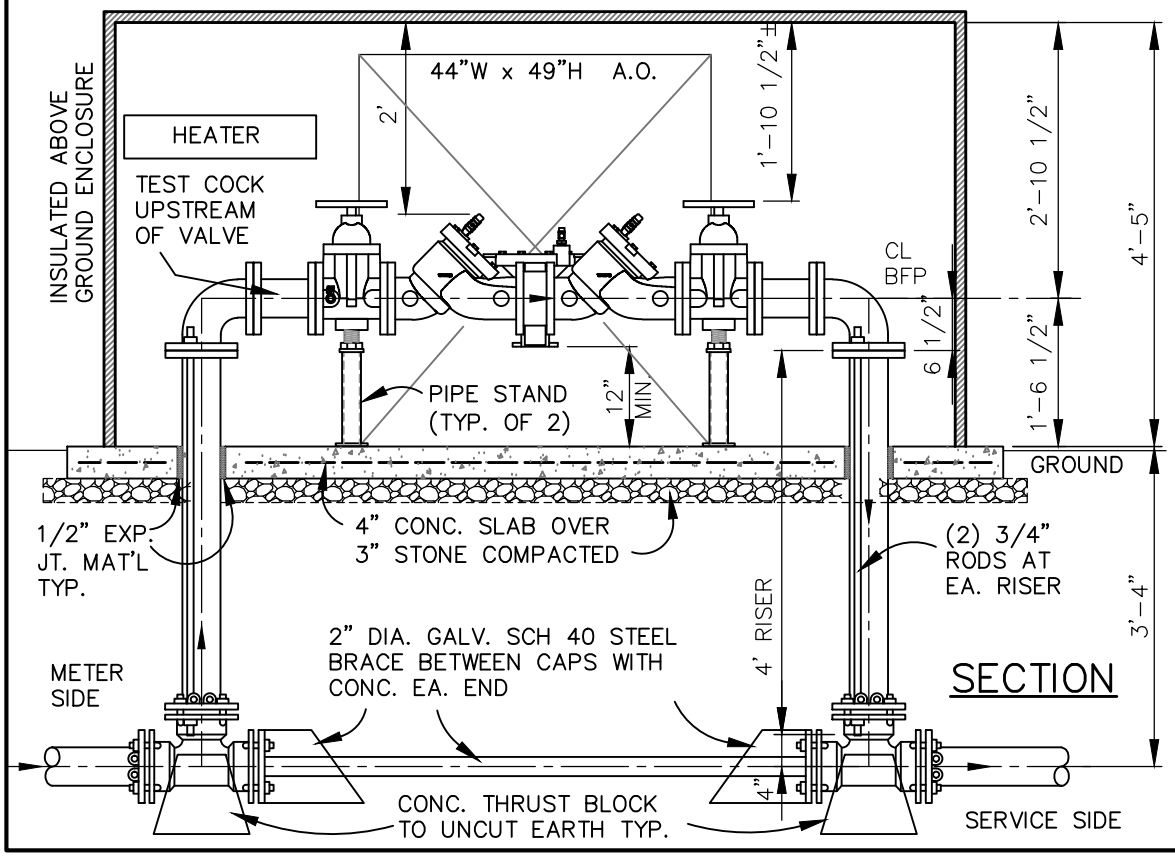

SECTION

NOTES:

1. ALL DIMENSIONS ARE APPROXIMATE.
2. BACKFLOW PREVENTER LOCATION REQUIRES PRIOR APPROVAL, MUST BE WITHIN 10 FT OF METER ON THE PROPERTY SIDE AND MUST NOT OBSTRUCT SIGHT DISTANCE. PROVIDE 36" CLEAR OUTSIDE OF ENCLOSURE ON ALL SIDES.
3. SLAB SHALL BE 3000 PSI CONCRETE, 117"LONG x 48"WIDE x 4"THICK WITH 6x6-W4XW4 WWF OVER 3" COMPACTED CRUSHED STONE.
4. REDUCED PRESSURE BACKFLOW PREVENTER (RP) SHALL BE A **'CLA-VAL' 4" RP-4** (OR EQUAL) WITH AWWA 'NRS' RESILIENT WEDGE GATE VALVES.
5. PIPE RISERS AND BENDS SHALL BE DUCTILE IRON FOR A MINIMUM OF 8 FT EACH SIDE OF GATE VALVES. ALL BELOW GROUND FITTINGS SHALL BE RESTRAINED MECHANICAL JOINTS.
6. THE ABOVE GROUND ENCLOSURE SHALL BE A **'HOT-BOX' #HA036105053** (OR EQUAL) ALUMINUM, IN TWO REMOVABLE PARTS JOINED ALONG THE LONGITUDINAL CENTERLINE, INSULATED TO R8, HAVE AN ACCESS OPENING 'A.O.' ON BOTH SIDES AS SHOWN, LOCKABLE SS HASP AND (2)TWO DRAIN PORTS AT GRADE. COLOR BEIGE.
7. NO BY-PASS OF BACKFLOW PREVENTER WILL BE ACCEPTED.
8. TWO REQUIRED ELECTRICAL RECEPTACLE INDICATED BY E SHALL BE A GFI MOUNTED A MINIMUM OF 30" ABOVE THE SLAB.
9. THE ENCLOSURE SHALL BE HEATED WITH ONE 1900W, 120V AND 1 PH HEATERS.

4" REDUCED PRESSURE BACKFLOW PREVENTER

24

W-BX_RPBFP HB6 4_RP-4

PAGE 6

SHEET: 1 OF 1 05/20/20 GSB

4.06

4" REDUCED PRESSURE BACKFLOW PREVENTER

DAVIE COUNTY PUBLIC UTILITIES
daviecountyNC.gov (336)753-6090

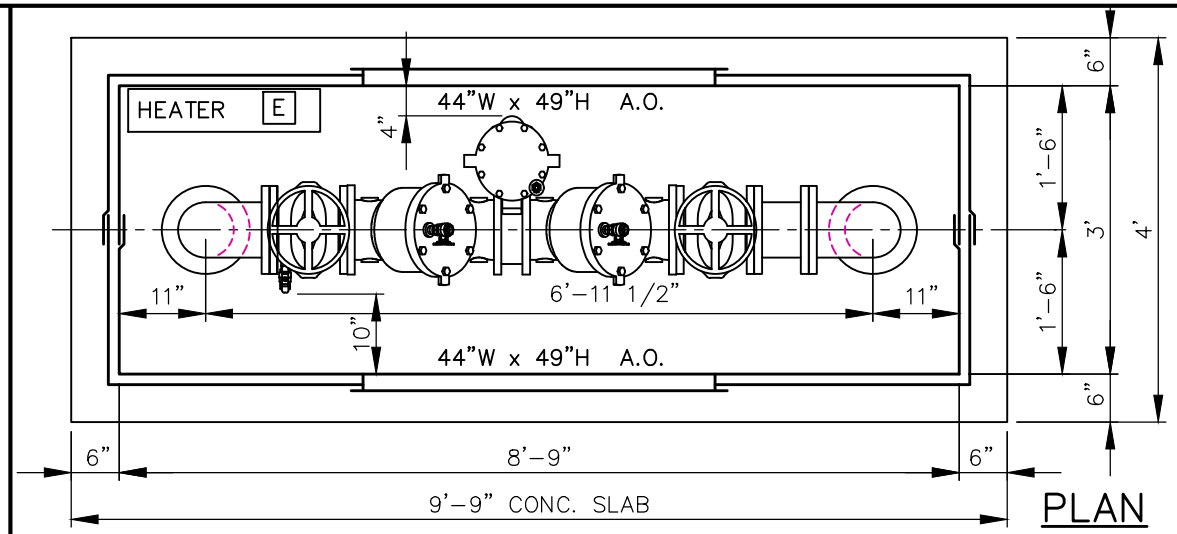

PLAN

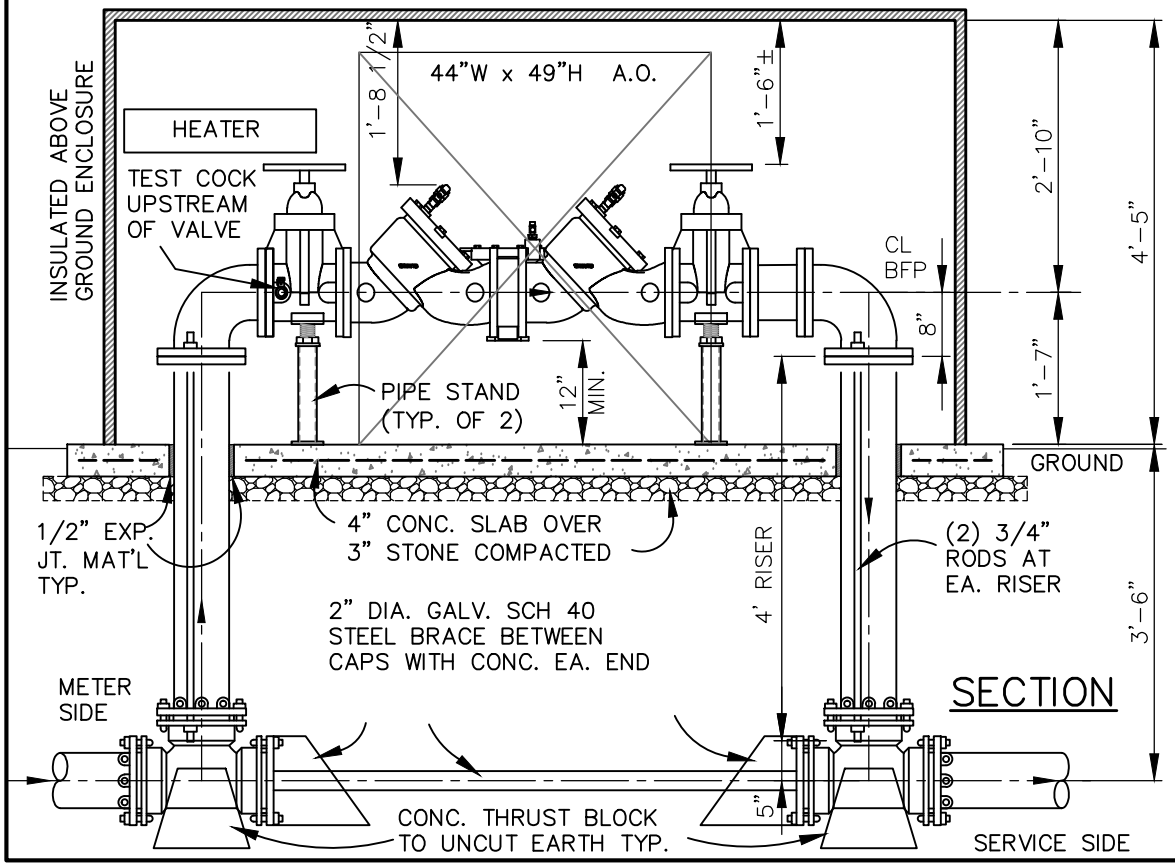

SECTION

NOTES:

1. ALL DIMENSIONS ARE APPROXIMATE.
2. BACKFLOW PREVENTER LOCATION REQUIRES PRIOR APPROVAL, MUST BE WITHIN 10 FT OF METER ON THE PROPERTY SIDE AND MUST NOT OBSTRUCT SIGHT DISTANCE. PROVIDE 36" CLEAR OUTSIDE OF ENCLOSURE ON ALL SIDES.
3. SLAB SHALL BE 3000 PSI CONCRETE, 117"LONG x 48"WIDE x 4"THICK WITH 6x6-W1.4XW1.4 WWF OVER 3" COMPACTED CRUSHED STONE.
4. REDUCED PRESSURE BACKFLOW PREVENTER (RP) SHALL BE A **'CLA-VAL' 6" RP-4** (OR EQUAL) WITH AWWA 'NRS' RESILIENT WEDGE GATE VALVES.
5. PIPE RISERS AND BENDS SHALL BE DUCTILE IRON FOR A MINIMUM OF 8 FT EACH SIDE OF GATE VALVES. ALL BELOW GROUND FITTINGS SHALL BE RESTRAINED MECHANICAL JOINTS.
6. THE ABOVE GROUND ENCLOSURE SHALL BE A **'HOT-BOX' #HA036105053** (OR EQUAL) ALUMINUM, IN TWO REMOVABLE PARTS JOINED ALONG THE LONGITUDINAL CENTERLINE, INSULATED TO R8, HAVE AN ACCESS OPENING 'A.O.' ON BOTH SIDES AS SHOWN, LOCKABLE SS HASP AND (2)TWO DRAIN PORTS AT GRADE. COLOR BEIGE.
7. NO BY-PASS OF BACKFLOW PREVENTER WILL BE ACCEPTED.
8. TWO REQUIRED ELECTRICAL RECEPTACLE INDICATED BY E SHALL BE A GFI MOUNTED A MINIMUM OF 30" ABOVE THE SLAB.
9. THE ENCLOSURE SHALL BE HEATED WITH ONE 1900W, 120V AND 1 PH HEATERS.

6" REDUCED PRESSURE BACKFLOW PREVENTER

24

W-BX_RPBFP HB6 6_RP-4

PAGE 7

SHEET: 1 OF 1 05/20/20 GSB

4.07

6" REDUCED PRESSURE BACKFLOW PREVENTER

DAVIE COUNTY PUBLIC UTILITIES
daviecountyNC.gov (336)753-6090

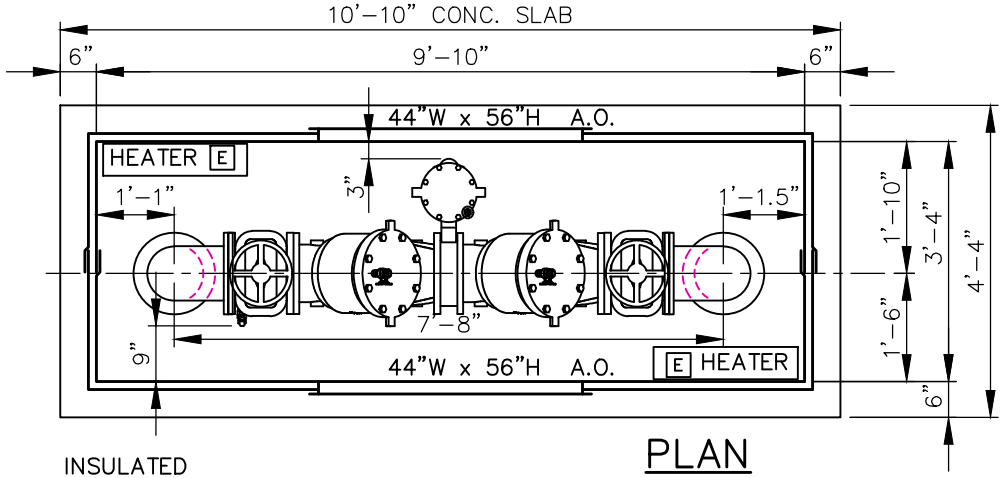

PLAN

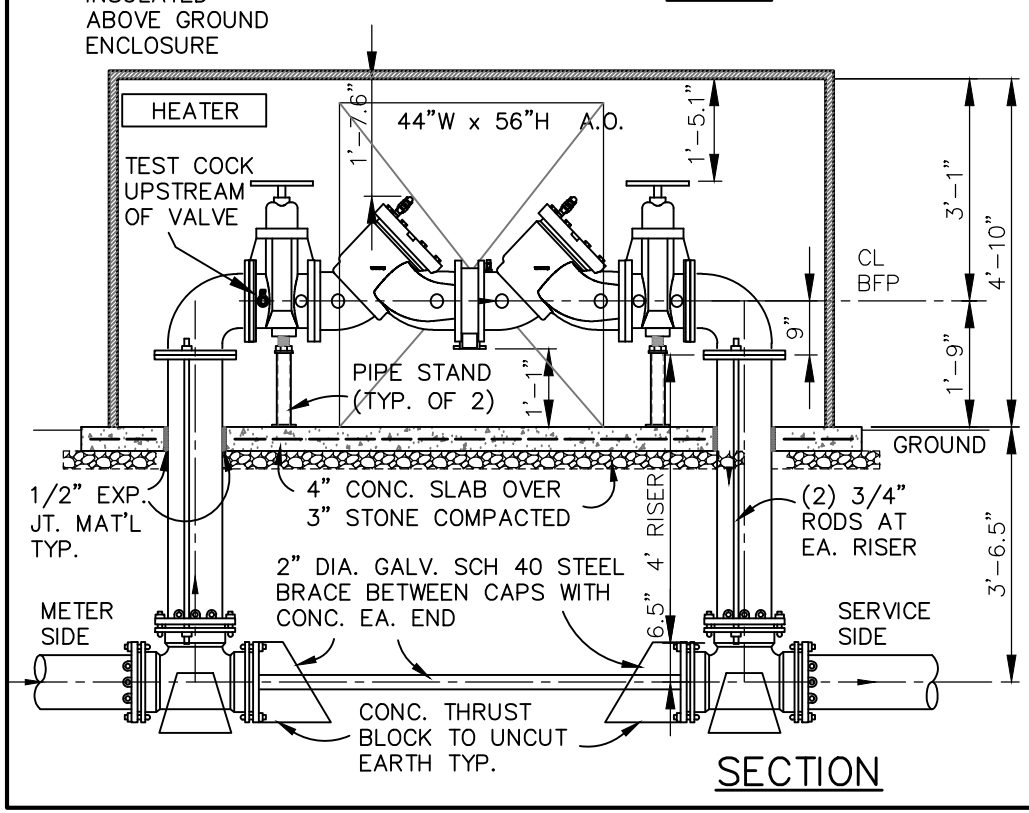

SECTION

NOTES:

1. BACKFLOW PREVENTER LOCATION REQUIRES PRIOR APPROVAL, MUST BE WITHIN 10 FT OF METER ON THE PROPERTY SIDE AND MUST NOT OBSTRUCT SIGHT DISTANCE. PROVIDE 36" CLEAR OUTSIDE OF ENCLOSURE ON ALL SIDES.
2. SLAB SHALL BE 3000 PSI CONCRETE, 117"LONG x 48"WIDE x 4"THICK WITH 6x6-W4XW4 WWF OVER 3" COMPACTED CRUSHED STONE.
3. REDUCED PRESSURE BACKFLOW PREVENTER (RP) SHALL BE A **'CLA-VAL' 8" RP-4** (OR EQUAL) WITH AWWA 'NRS' RESILIENT WEDGE GATE VALVES.
4. PIPE RISERS AND BENDS SHALL BE DUCTILE IRON FOR A MINIMUM OF 8 FT EACH SIDE OF GATE VALVES. ALL BELOW GROUND FITTINGS SHALL BE RESTRAINED MECHANICAL JOINTS.
5. THE ABOVE GROUND ENCLOSURE SHALL BE A **'HOT-BOX' #HA040118058** (OR EQUAL) ALUMINUM, IN TWO REMOVABLE PARTS JOINED ALONG THE LONGITUDINAL CENTERLINE, INSULATED TO R8, HAVE AN ACCESS OPENING 'A.O.' ON BOTH SIDES AS SHOWN, LOCKABLE SS HASP AND (2)TWO DRAIN PORTS AT GRADE. COLOR BEIGE.
6. NO BY-PASS OF BACKFLOW PREVENTER WILL BE ACCEPTED.
7. TWO REQUIRED ELECTRICAL RECEPTACLE INDICATED BY E SHALL BE A GFI MOUNTED A MINIMUM OF 30" ABOVE THE SLAB.
8. THE ENCLOSURE SHALL BE HEATED WITH TWO 1500W, 120V AND 1 PH HEATERS.

8" REDUCED PRESSURE BACKFLOW PREVENTER

32

W-BX_RPBFP HB8 8_RP-4

PAGE 8

SHEET: 1 OF 1 05/20/20 GSB

4.08

8" REDUCED PRESSURE BACKFLOW PREVENTER

DAVIE COUNTY PUBLIC UTILITIES
daviecountyNC.gov (336)753-6090

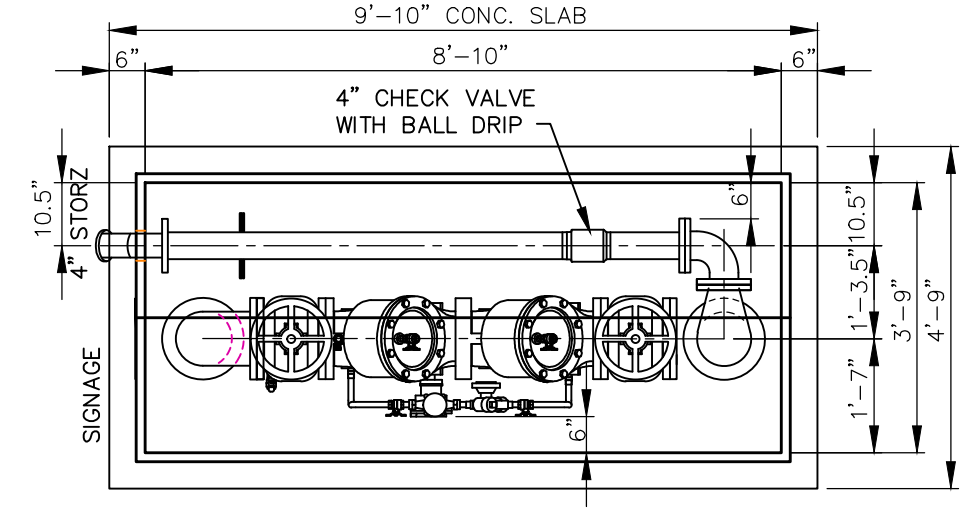

PLAN

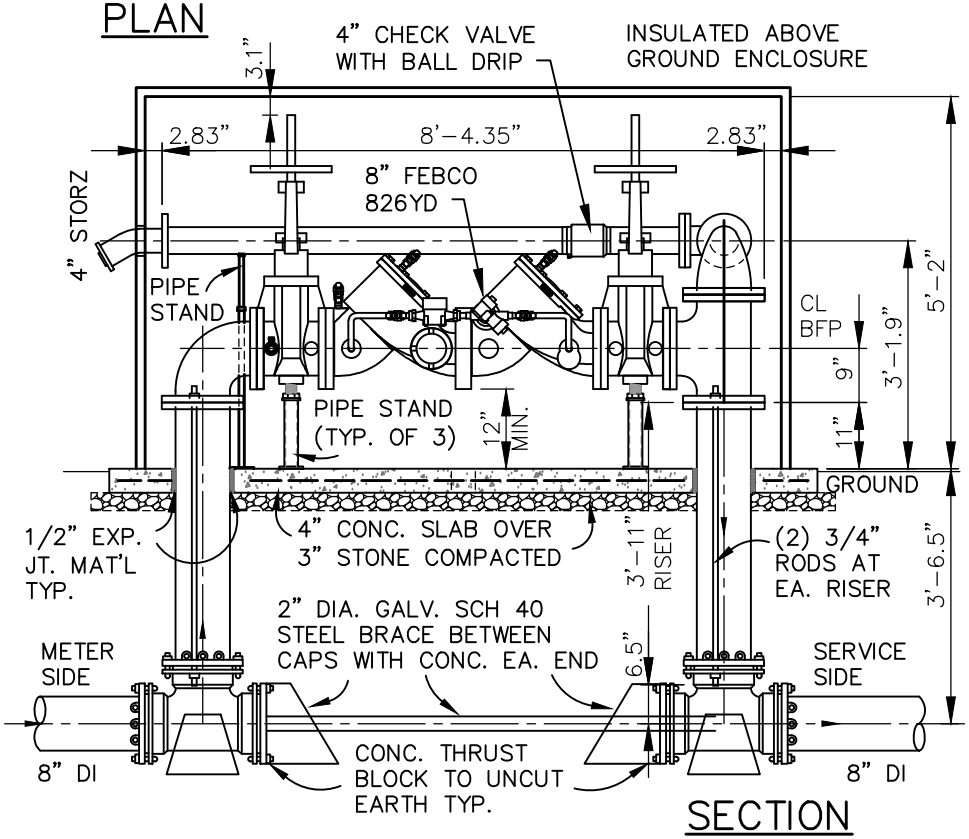

SECTION

NOTES:

1. BACKFLOW PREVENTER LOCATION REQUIRES PRIOR APPROVAL, MUST BE WITHIN 10 FT OF METER ON THE PROPERTY SIDE AND MUST NOT OBSTRUCT SIGHT DISTANCE. PROVIDE 36" CLEAR OUTSIDE OF ENCLOSURE ON ALL SIDES.
2. SLAB SHALL BE 3000 PSI CONCRETE, 4"THICK WITH 6x6-W4XW4 WWF OVER 3" COMPACTED CRUSHED STONE.
3. BACKFLOW PREVENTER SHALL BE A **'FEBCO' 8" 826YD** WITH AWWA RESILIENT WEDGE GATE VALVES.
4. PIPE RISERS AND BENDS SHALL BE DUCTILE IRON FOR A MINIMUM OF 8 FT EACH SIDE OF GATE VALVES. ALL BELOW GROUND FITTINGS SHALL BE RESTRAINED MECHANICAL JOINTS.
5. THE ENCLOSURE SHALL BE A ALUMINUM **'HOT-BOX' #HA045106062500** WITH FDC PENETRATION AND REMOVABLE PARTS JOINED ALONG THE LONGITUDINAL CENTERLINE, INSULATED TO R8, HAVE AN ACCESS OPENING 'A.O.' ON BOTH SIDES AS SHOWN AND DRAIN PORTS AT GRADE. NO LIFTING HANDLES ON THE REAR SECTION DUE TO PENETRATION. ENCLOSURE COLOR SHALL BE BEIGE
6. NO BY-PASS OF BACKFLOW PREVENTER WILL BE ACCEPTED.
7. PROVIDE "FIRE DEPARTMENT CONNECTION" SIGNAGE IN ACCORDANCE WITH STATE AND LOCAL REGULATIONS.
8. TWO REQUIRED ELECTRICAL RECEPTACLE INDICATED BY [E] SHALL BE A GFI MOUNTED A MINIMUM OF 30" ABOVE THE SLAB.
9. THE ENCLOSURE SHALL BE HEATED WITH TWO 1500W, 120V SINGLE PHASE HEATERS.

8" FIRE LINE RPZ & FDC IN AN ENCLOSURE

32 W-FIRE RPZ+FDC 800

PAGE 9

SHEET: 1 OF 1 05/20/20 GSB

4.09

8" FIRE LINE RPZ & FDC IN AN ENCLOSURE

DAVIE COUNTY PUBLIC UTILITIES
daviecountyNC.gov (336)753-6090

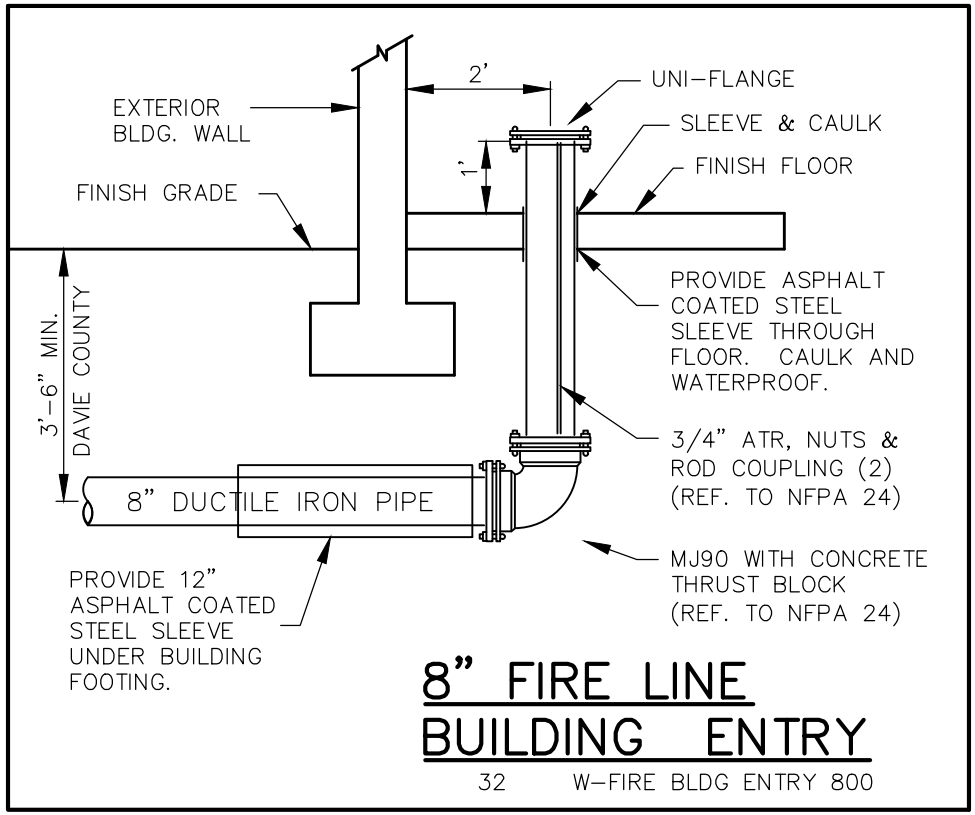

PAGE 10

SHEET: 1 OF 1 05/20/20 GSB

4.10

8" FIRE LINE BUILDING ENTRY

DAVIE COUNTY PUBLIC UTILITIES
daviecountyNC.gov (336)753-6090

GRAVITY SEWER GENERAL NOTES:

1. STANDARD GRAVITY SANITARY SEWER SHALL BE SDR-35 PVC WHERE APPROPRIATE.

2. DUCTILE IRON PIPE SHALL BE USED IF SANITARY SEWER DOES NOT MEET OR EXCEED THE FOLLOWING SEPARATION:
   A. 36" MINIMUM GROUND COVER
   B. 12" VERTICAL FROM STORM SEWER PIPE (CROSSING OR PARALLEL)
   C. 18" VERTICAL UNDER OR 10' HORIZONTAL FROM WATER MAIN.
   D. 10' HORIZONTAL FROM STREAM, LAKE OR WATER IMPOUNDMENTS.

3. CENTER ONE 20' SECTION OF PIPE AT ALL PIPE CROSSINGS.

4. WHEN CONNECTING DUCTILE IRON PIPE TO PVC PIPE, USE AN APPROPRIATE TRANSITION GASKETS TO PVC BELL END AND A SLEEVE WITH APPROPRIATE GASKETS AT THE PLAIN END.

5. WATERTIGHT AND SEALED FRAME AND COVERS ARE REQUIRED WHERE THE RIM ELEVATION IS LESS THAN 1 FOOT ABOVE THE 100 YEAR FLOOD ELEVATION OR AS INDICATED ON THE APPROVED PROFILE. U.S. FOUNDRY & MANUFACTURING CORPORATION MODEL #USF 668-KL-BWT.

6. WHERE ANTI-SEEP COLLARS ARE REQUIRED, THEY SHALL BE PLACED A MINIMUM OF 8 FT FROM MANHOLES.

7. FOR MANHOLES IN ROAD RIGHT-OF-WAY, SET FRAME AND COVER TO SHOULDER GRADE IN A COMPACTED CONDITION.

8. OUTSIDE ROAD RIGHT-OF-WAY PROVIDE A PERMANENT EASEMENT OF 30' FOR GRAVITY SEWER AND 25' FOR SEWER FORCEMAIN WITH AN ADDITIONAL 10' CONSTRUCTION EASEMENT.

9. SEWER SERVICE SCH 40 PVC PIPE AND FITTINGS SHALL HAVE FULLY PRIMED MEDIUM VISCOSITY GLUED JOINTS.

10. ALL SEWER CONNECTIONS THAT CROSS UNDER AN EXISTING ROAD SHALL BE BORED.

DAVIE COUNTY PUBLIC UTILITIES
(336)753-6090
daviecountyNC.gov

GRAVITY SEWER
GENERAL NOTES

GRAVITY SEWER TESTING NOTES:

1. FOR THE GRAVITY PIPE, PERFORM STRAIGHTNESS, LEAKAGE AND DEFLECTION TEST ON THE SEWER PIPE IN ACCORDANCE WITH TO 'NCDEQ' REGULATIONS.
   A. LEAKAGE TEST: USE NO MORE THAN 4 PSI AIR PRESSURE. OBSERVE AND RECORD THE TIME FOR A 1 PSI DROP. THE TIME SHALL NOT EXCEED THE VALUE IN THE AIR LEAKAGE TABLE: MINIMUM TIME (MINUTES–SECONDS) ALLOWED FOR PRESSURE DROP FROM 3.5 TO 2.5 PSIG FOR VARIOUS PIPE LENGTHS AND DIAMETER.
   B. DEFLECTION TEST SHALL EASILY PASS A STANDARD MANDREL FOR THE INDICATED NOMINAL PIPE SIZE WITH ALLOWANCE FOR NO MORE THAN 4% DEFLECTION.
   C. TESTS MUST BE OBSERVED BY THE A UTILITY REPRESENTATIVE AND DOCUMENTED IN THE CONSTRUCTION RECORDS BY THE CONTRACTOR.

2. FOR THE MANHOLES, PERFORM VACUUM TEST ON SEWER MANHOLES IN ACCORDANCE WITH TO 'NCDEQ' REGULATIONS.
   A. TEMPORARILY PLUG ALL PIPES ENTERING THE MANHOLE AND PLACE THE TEST HEAD INSIDE THE RIM OF THE CAST IRON FRAME AND INFLATE.
   B. THE PRESSURE GAUGE SHALL BE LIQUID FILLED, HAVING A 3.5 INCH DIAMETER FACE WITH A READING FROM ZERO TO THIRTY INCHES OF MERCURY
   C. A VACUUM OF AT LEAST TEN INCHES OF MERCURY (10" Hg) SHALL BE DRAWN ON THE MANHOLE.
   D. SHUT THE VALVE OF THE VACUUM LINE TO THE MANHOLE OFF AND DISCONNECT THE VACUUM LINE FROM THE PUMP.
   E. THE MANHOLE SHALL BE CONSIDERED TO PASS THE VACUUM TEST IF THE VACUUM READING DOES NOT DROP MORE THAN 1" Hg (i.e. FROM 10" Hg TO 9" Hg) DURING THE MINIMUM TEST TIMES FROM THE TABLE BELOW.
   F. IF A MANHOLE FAILS THE VACUUM TEST, THE MANHOLE SURFACES SHALL BE PROPERLY REPAIRED.
   G. THIS PROCESS SHALL CONTINUE UNTIL A SATISFACTORY TEST IS OBTAINED.
   H. ALL TEMPORARY PLUGS SHALL BE REMOVED AFTER EACH TEST.
   I. TESTS MUST BE OBSERVED BY THE A UTILITY REPRESENTATIVE AND DOCUMENTED IN THE CONSTRUCTION RECORDS BY THE CONTRACTOR.

MINMIMUM VACUUM TEST TIMES

MH Depth	MH DIAMETERS		
ft	4'	5'	6'
15 or less	50"	1' 05"	1' 20"
15.01 to 30	1' 30"	1' 45"	2' 10"

DAVIE COUNTY PUBLIC UTILITIES
(336)753-6090
daviecountyNC.gov

GRAVITY SEWER TESTING NOTES

05/20/20
GSB

SHEET: 1 OF 1

5.02

PAGE 2

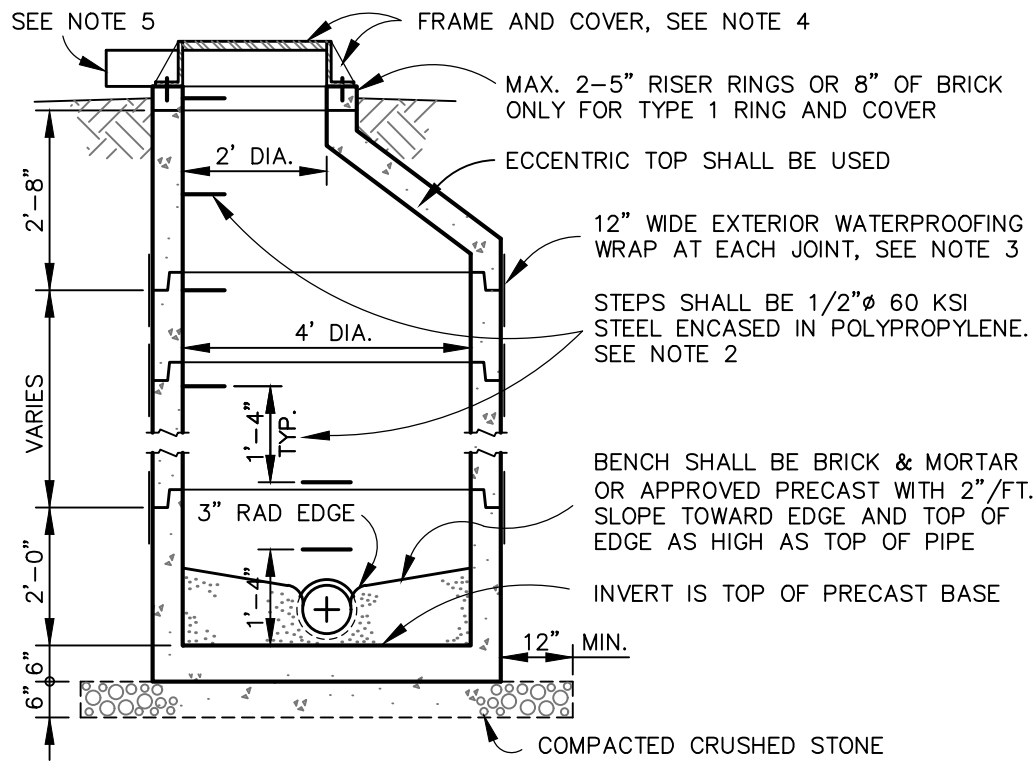

GENERAL NOTES:

1. PRECAST MANHOLE COMPONENTS SHALL MEET LATEST REVISION OF ASTM C–478.
2. ASSEMBLE RISERS SO ALL STEPS WILL HAVE A 16" SPACING THE FULL HEIGHT OF MANHOLE. FIRST STEP SHALL BE MAXIMUM 22" ABOVE BENCH. ALIGN STEPS AND COVER OVER OUTLET PIPE UNLESS NOTED OTHERWISE.
3. AT ALL JOINTS PROVIDE APPROVED GASKET, FILL BOTH OUTSIDE AND INSIDE JOINTS WITH NON–SHRINK GROUT AND WRAP EXTERIOR JOINTS WITH 12" WIDE WATERPROOFING. GROUT LIFT HOLES AND PIPE ENDS.
4. FRAME AND COVER SHALL BE U.S. FOUNDRY #669–KL AND HAVE "SANITARY SEWER" LABEL AND (2)1"ø VENT HOLES. USE #669–KL–BWTL WITHOUT HOLES FOR WATERTIGHT LIDS. PROVIDE ROPE MASTIC BETWEEN FRAME AND CONCRETE. PROVIDE (4) 1/2"ø x3"L 304 SS LAG ANCHOR BOLTS SECURED WITH EPOXY IN CONCRETE.
5. WHERE MANHOLE TOP COULD BE SUBJECT TO VEHICULAR TRAFFIC, PROVIDE CONCRETE COLLAR WITH MINIMUM 6"D x12"W WITH TOP OF CONCRETE BEING 1.5" BELOW RIM.
6. GRADE TO DRAIN AWAY FROM MANHOLE RING AND COVER AS NEEDED.

PRECAST SANITARY SEWER MANHOLE

REF. NCDOT RSD 840.67 32 840–67WS

DAVIE COUNTY PUBLIC UTILITIES
(336)753–6090
daviecountyNC.gov

PRECAST SANITARY SEWER MANHOLE

PAGE 3
SHEET: 1 OF 1 05/20/20 GSB
5.03

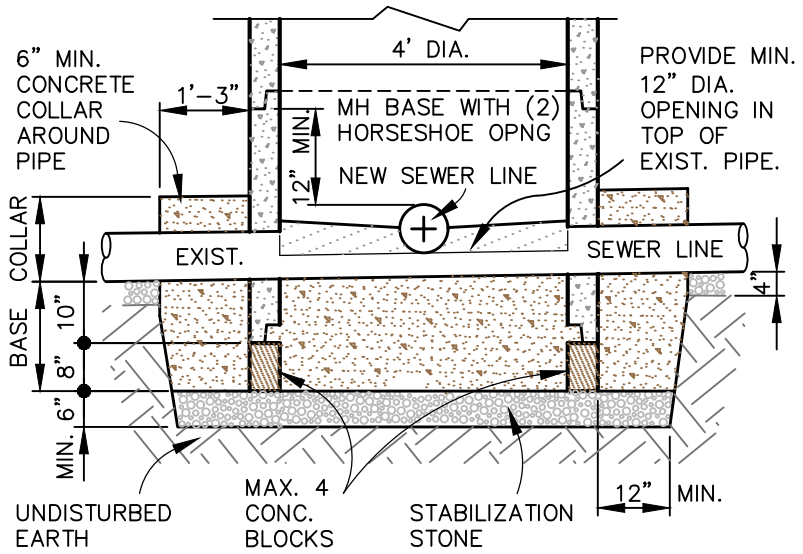

SEQUENCE NOTES:

1. COMPACT STONE, POUR 4000 PSI CONCRETE TO INVERT OF EXISTING PIPE, THEN PLACE HORSESHOE MANHOLE IN WET CONCRETE OVER EXISTING PIPE AND ONTO CONCRETE BLOCKS.
2. AFTER BASE CONCRETE HAS SET, CORE HOLE FOR NEW SEWER LINE AND THEN SET NEW INCOMING SEWER LINE.
3. CUT OUT TOP HALF OF EXISTING PIPE. POUR NEW CONCRETE BENCH. SLOPE NEW INVERT AND BENCH TO DRAIN.
4. WATERPROOF ALL COLD JOINTS AROUND PIPES WITH NON-SHRINK GROUT.
5. POUR CONCRETE COLLAR.

HORSESHOE MANHOLE CONSTRUCTION

32 840HOR_WS

DAVIE COUNTY PUBLIC UTILITIES
(336)753-6090
daviecountyNC.gov

HORSESHOE MANHOLE CONSTRUCTION

05/20/20
GSB

SHEET: 1 OF 1

5.04

PAGE 4

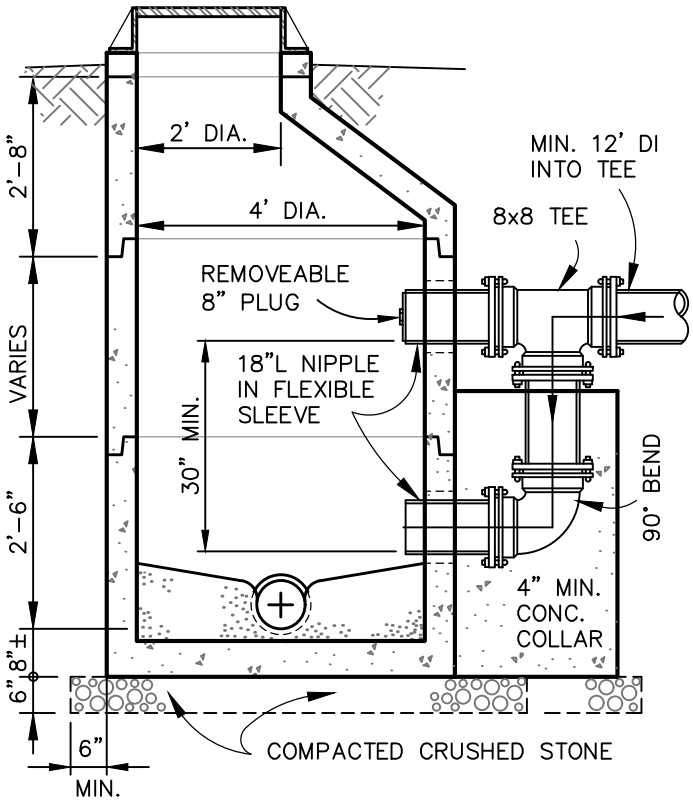

GENERAL NOTES:

1. SEE STANDARD PRECAST SANITARY SEWER MANHOLE FOR ADDITIONAL MANHOLE DETAILS.
2. ALL PIPE AND FITTINGS SHALL BE DUCTILE IRON. PROVIDE MINIMUM OF 12 FT OF DUCTILE IRON PIPE UPSTREAM OF TEE.
3. CONCRETE ENCASEMENT FOR OUTSIDE DROP MANHOLES SHALL BE STANDARD SUBSURFACE SUPPORT CONCRETE AS SPECIFIED IN NOTES FOR TRENCH AND PIPING.

OUTSIDE DROP PRECAST MANHOLE

REF. NCDOT RSD 840.67 32 840-67oD

DAVIE COUNTY PUBLIC UTILITIES
(336)753-6090
daviecountyNC.gov

OUTSIDE DROP
PRECAST MANHOLE

PAGE 5
SHEET: 1 OF 1 05/20/20 GSB
5.05

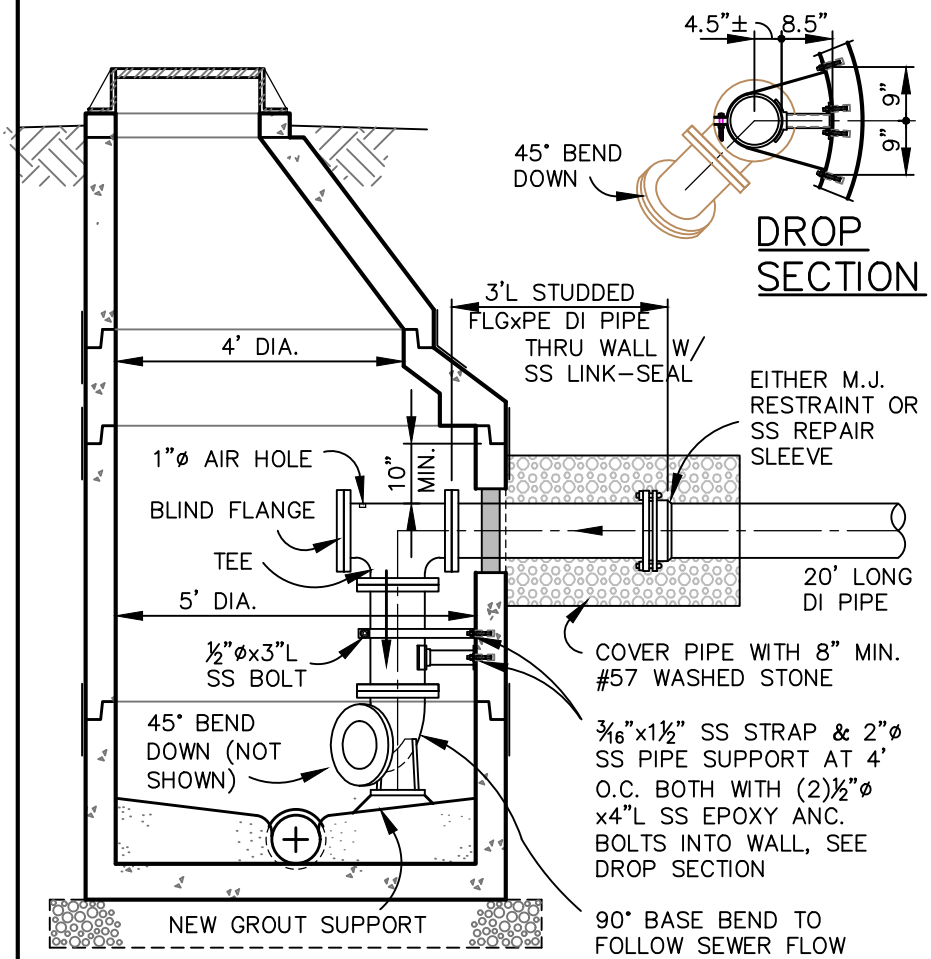

GENERAL NOTES:

1. ALL PIPE AND FITTINGS INSIDE MANHOLE SHALL BE FLANGED DUCTILE IRON.
2. LOCATE STEPS & MH TOP AS NEEDED.

8" INSIDE DROP PRECAST MANHOLE

REF. NCDOT 840.67 32 840-67iD_8PIPSUPRT

DAVIE COUNTY PUBLIC UTILITIES
(336)753-6090
daviecountyNC.gov

8" INSIDE DROP PRECAST MANHOLE

PAGE 6
SHEET: 1 OF 1 05/20/20 GSB
5.06

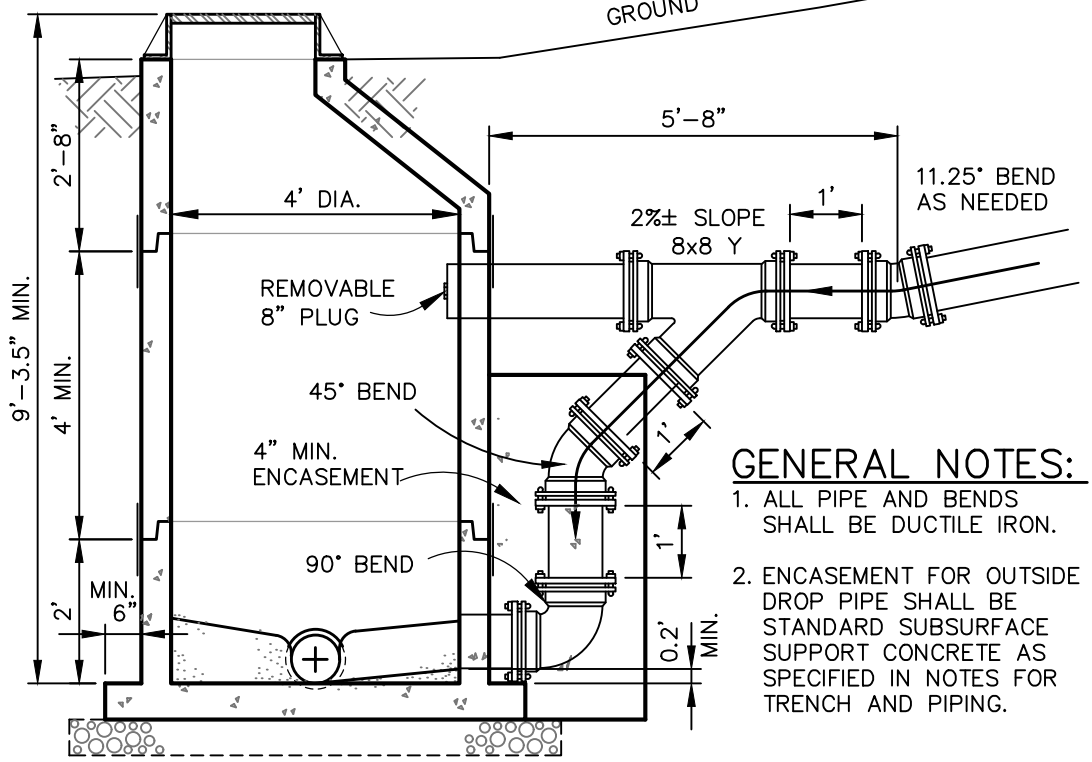

GENERAL NOTES:

1. ALL PIPE AND BENDS SHALL BE DUCTILE IRON.
2. ENCASEMENT FOR OUTSIDE DROP PIPE SHALL BE STANDARD SUBSURFACE SUPPORT CONCRETE AS SPECIFIED IN NOTES FOR TRENCH AND PIPING.

OUTSIDE 'Y' DROP PRECAST MANHOLE

REF. NCDOT RSD 840.67 32 840-67oD+6'y

DAVIE COUNTY PUBLIC UTILITIES
(336)753-6090
daviecountyNC.gov

OUTSIDE 'Y' DROP
PRECAST MANHOLE

SHEET: 1 OF 1 05/20/20 GSB
5.07

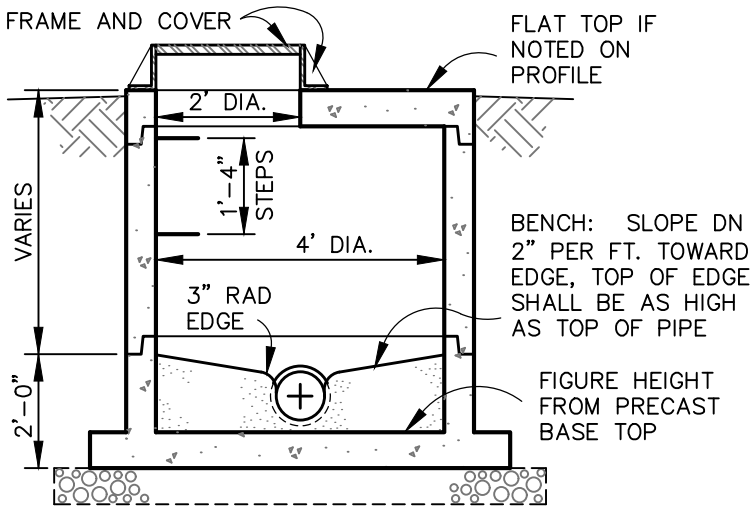

NOTE:
SEE STANDARD PRECAST SANITARY SEWER MANHOLE FOR ADDITIONAL MANHOLE DETAILS.

FLAT TOP PRECAST MANHOLE

32 840-67flat top+

DAVIE COUNTY PUBLIC UTILITIES
(336)753-6090
daviecountyNC.gov

FLAT TOP PRECAST MANHOLE

05/20/20
GSB

SHEET: 1 OF 1

5.08

PAGE 8

FORCEMAIN GENERAL NOTES:

1. STANDARD SEWER FORCEMAIN SHALL BE PVC C-900 OR FUSIBLE HDPE WHERE APPROVED.

2. DUCTILE IRON PIPE SHALL BE USED IF SANITARY SEWER DOES NOT MEET OR EXCEED THE FOLLOWING SEPARATION:
   A. 36" MINIMUM GROUND COVER
   B. 12" VERTICAL FROM STORM SEWER PIPE (CROSSING OR PARALLEL)
   C. 18" VERTICAL UNDER OR 10' HORIZONTAL FROM WATER MAIN.
   D. 10' HORIZONTAL FROM STREAM, LAKE OR WATER IMPOUNDMENTS.

2. CENTER ONE 20' SECTION OF DUCTILE IRON PIPE AT ALL CROSSINGS.

3. FOR AIR VALVES IN ROAD RIGHT-OF-WAY, SET MANHOLE FRAME AND COVER TO SHOULDER GRADE WITH SURROUNDING SOIL OR STONE IN A COMPACTED CONDITION.

4. PRESSURE TEST THE SYSTEM AT 150 PSI OR GREATER. MAINTAIN FOR AT LEAST THREE HOURS. ADD SUFFICIENT WATER TO BRING BACK TO STARTING PRESSURE AFTER THREE HOURS. WATER ADDED SHALL NOT EXCEED THE GPH/1000 FT OF LINE TESTED PER THE FOLLOWING TABLE. PRESSURE TESTING MUST BE OBSERVED BY THE A UTILITY REPRESENTATIVE AND DOCUMENTED IN THE CONSTRUCTION RECORDS BY THE CONTRACTOR.

Allowable Leakage

Gal/1000ft			Water Added
Pipe Dia. in.	**20'L pipe gal/hr**	**Gals for** 3 hrs	**Gals**
4	0.33	0.99	**D & H in** **.0034 x D^2(H)**
6	0.5	1.50	**D & H ft** **5.875 x D^2(H)**
8	0.67	2.01	
12	1	3.00	

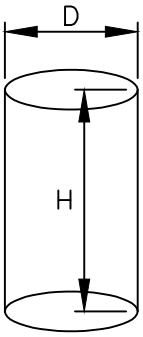

DAVIE COUNTY PUBLIC UTILITIES
(336)753-6090
daviecountyNC.gov

SEWER FORCEMAIN GENERAL NOTES

PAGE 9
SHEET: 1 OF 1 05/20/20 GSB
5.09

NOTES:

1. MANHOLES CAN BE CORED DRILLED LESS THAN 18" ABOVE SHELF FOR SERVICE CONNECTION.
2. COMPACT ALL BACKFILL TO 90% STANDARD PROCTOR OR BETTER.

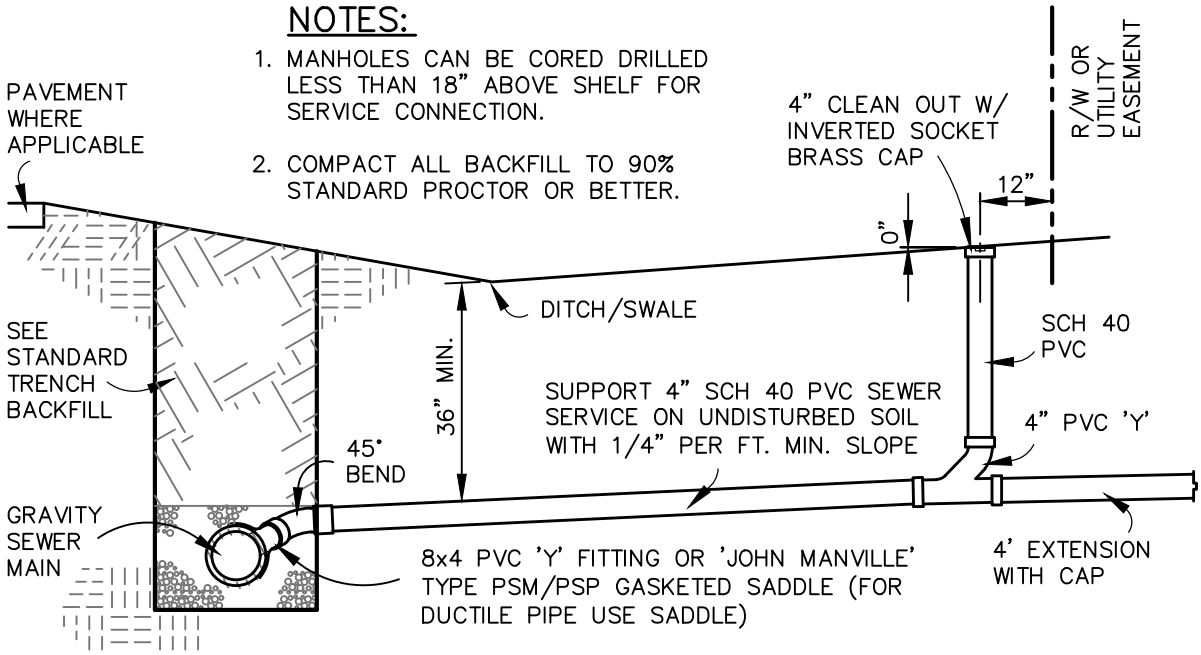

4" SEWER SERVICE CONNECTION

32 SS-CNT4

DAVIE COUNTY PUBLIC UTILITIES
(336)753-6090
daviecountyNC.gov

4" SEWER SERVICE CONNECTION

05/20/20
GSB

SHEET: 1 OF 1

6.01

PAGE 1

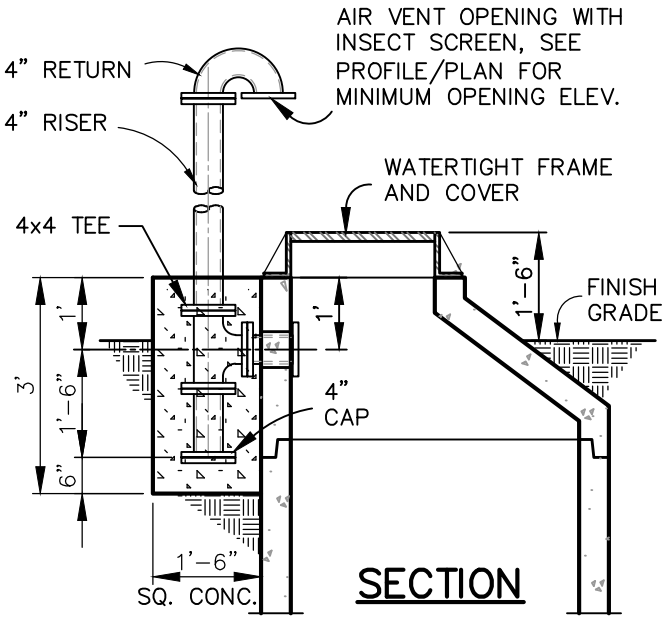

GENERAL NOTES:

1. ALL PIPE AND BENDS SHALL BE DUCTILE IRON.
2. AIR VENT OPENING SHALL BE 1 FOOT MINIMUM ABOVE THE 100 YEAR FLOOD ELEVATION.
3. MOUNT 4"ø FLANGE NIPPLE WITH (4)3/4"x4"L STAINLESS STEEL WEDGE ANCHORS TO THE INSIDE WALL.
4. ENCASEMENT FOR VENT PIPE SHALL BE STANDARD SUBSURFACE SUPPORT CONCRETE AS SPECIFIED IN NOTES FOR TRENCH AND PIPING.
5. USE 4"ø FLANGE RETURN WITH SS INSECT SCREEN OVER VENT OPENING.

VENT FOR SANITARY SEWER MANHOLE

32 840-67VENT

DAVIE COUNTY PUBLIC UTILITIES
(336)753-6090
daviecountyNC.gov

VENT FOR SANITARY SEWER MANHOLE

PAGE 2
SHEET: 1 OF 1 05/20/20 GSB
6.02

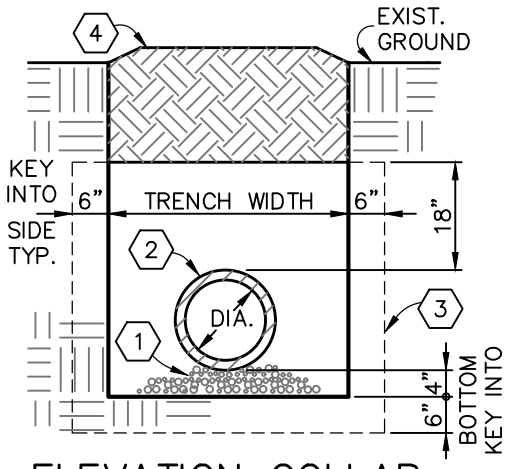

ELEVATION COLLAR

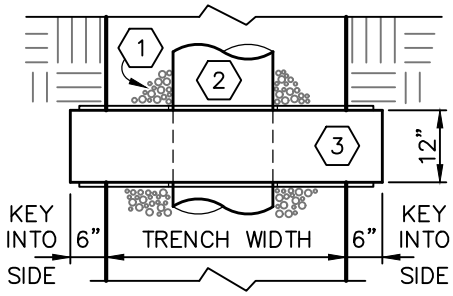

PLAN COLLAR

KEYNOTES

1. PLACE BEDDING MATERIAL AGAINST THE TEMPORARY PLYWOOD FORM.
2. SANITARY SEWER PIPE, DIA. VARIES
3. SAKRETE MIXED IN HOLE
4. SEE STANDARD TRENCH BACKFILL

ANTISEEP/ ANCHOR COLLAR

32 ANTISEEP SAKRETE

DAVIE COUNTY PUBLIC UTILITIES
(336)753-6090
daviecountyNC.gov

ANTISEEP/ANCHOR COLLAR

PAGE 3
SHEET: 1 OF 1 05/20/20 GSB
6.03

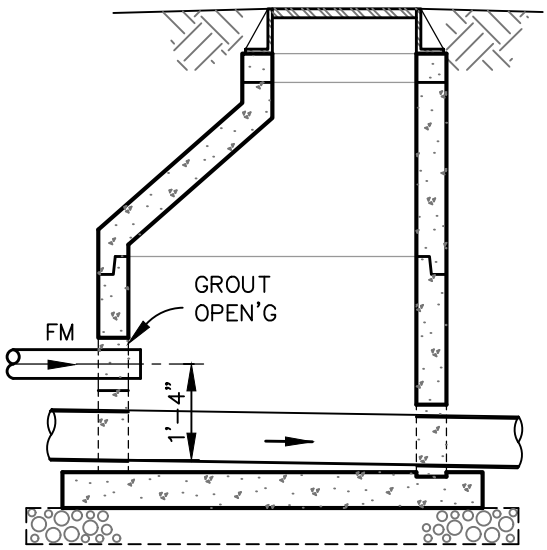

FM OUTLET INTO MANHOLE

32 840fm out low+

DAVIE COUNTY PUBLIC UTILITIES
daviecountyNC.gov
(336)753-6090

FM OUTLET INTO MANHOLE

SHEET: 1 OF 1 05/20/20 GSB

6.04

PAGE 4

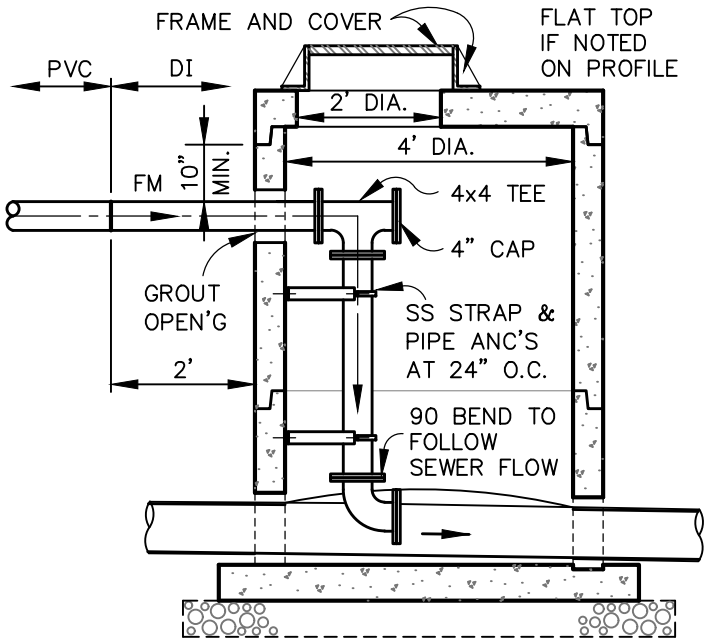

NOTES:

1. SEE STANDARD PRECAST SANITARY SEWER MANHOLE FOR ADDITIONAL MANHOLE DETAILS.
2. PROVIDE DUCTILE IRON PIPE AND FLANGE FITTINGS INSIDE MANHOLE.

FORCEMAIN OUTLET INSIDE DROP MANHOLE

32 840id 4fm+

DAVIE COUNTY PUBLIC UTILITIES
(336)753-6090
daviecountyNC.gov

FORCEMAIN OUTLET
INSIDE DROP MANHOLE

PAGE 5
SHEET: 1 OF 1 05/20/20 GSB
6.05

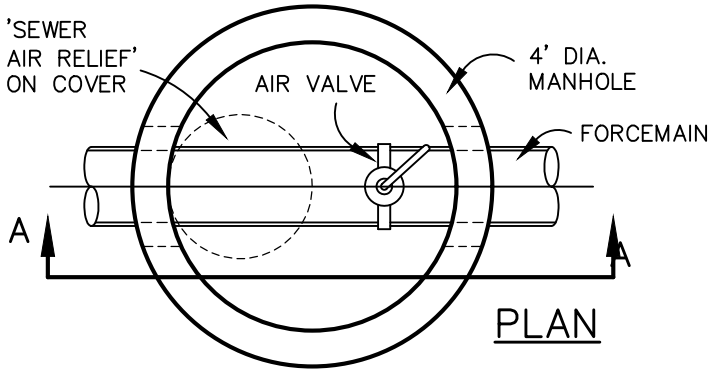

PLAN

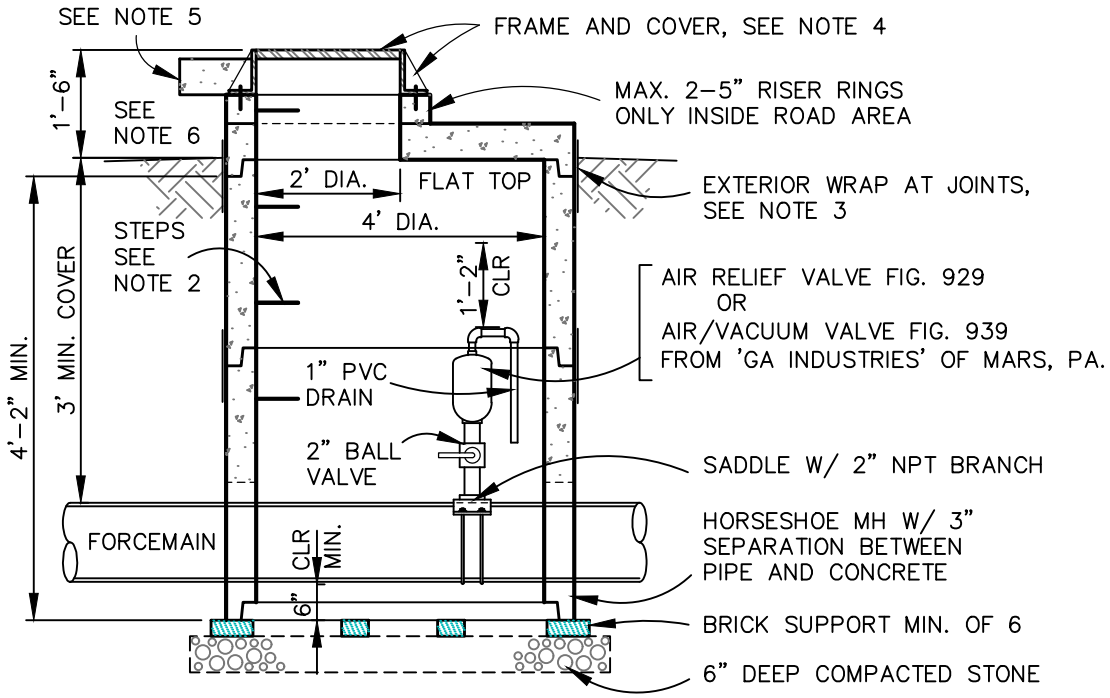

SECTION A-A

NOTES:

1. MANHOLE COMPONENTS SHALL MEET REQUIREMENTS OF AASHTO M199.

2. STEPS SHALL BE ½"ø 60 KSI STEEL ENCASED IN POLYPROPYLENE. ASSEMBLE RISERS SO ALL STEPS WILL HAVE A 16" SPACING THE FULL HEIGHT OF MANHOLE. FIRST STEP SHALL BE MAXIMUM 20" ABOVE FORCEMAIN. MH STEPS AND COVER SHALL BE ALIGNED AS SHOWN.

3. PROVIDE BUTYL RUBBER GASKET IN ALL JOINTS. FILL ALL JOINTS AND LIFT HOLES WITH NON-SHRINK GROUT. PROVIDE 12" WIDE EXTERIOR WATERPROOFING WRAP AT EACH JOINT.

4. FRAME AND COVER SHALL BE U.S. FOUNDRY #669-KL AND HAVE "SEWER AIR RELIEF" LABEL AND (2)1"ø VENT HOLES. USE #668-KL-BWT WITHOUT HOLES FOR WATERTIGHT LIDS. PROVIDE ROPE MASTIC BETWEEN FRAME AND CONCRETE. IF FRAME IS NOT SURROUNDED BY SOIL OR CONSTRUCTION MATERIAL, PROVIDE (4) ⅜"x1½" 304 SS LAG ANCHOR BOLTS THRU FRAME AND INTO CONCRETE WITH LEAD SHIELD ANCHORS.

5. WHERE MANHOLE TOP COULD BE SUBJECT TO VEHICULAR TRAFFIC, PROVIDE CONCRETE COLLAR WITH MINIMUM 6"D x12"W WITH TOP OF CONCRETE BEING 1½" BELOW RIM. GRADE TO DRAIN AWAY FROM FRAME AND COVER.

6. OUTSIDE ROAD AREA THE TOP OF FRAME AND COVER SHALL BE A MINIMUM 18" ABOVE THE GROUND.

AIR RELIEF VALVE & AIR/VACUUM VALVE MANHOLE

DAVIE COUNTY PUBLIC UTILITIES
(336)753-6090
daviecountyNC.gov

AIR RELIEF VALVE &
AIR/VACUUM VALVE MANHOLE

PAGE 6
SHEET: 1 OF 1 05/20/20 GSB
6.06