# County of Davie

# Public Utilities Department

## Line Extension, Cost Sharing, and Reimbursement Policy

## With

## Design and Construction Standards

## Scope

This manual applies to all design and construction related to water or sewer utilities that may represent an extension of the public systems owned or maintained by the County of Davie.

The Davie County Public Utilities Director is:

Mr. Johnny Lambert
Davie County Public Utilities
298 East Depot Street, Ste 200
Mocksville, NC 27028
(336) 753-6090 | fax: (336) 751-5855
jlambert@daviecountync.gov

## Regulatory Jurisdictions

Activities covered under this scope must be approved by the Davie County Public Utilities Director, and, where applicable, the Davie County Planning Director, Planning Directors of sub-jurisdictions, NCDENR, NCDOT, the US Corps of Engineers and other regulatory agencies having jurisdictions.

Activities covered hereunder must be compliant with the Davie County Sewer use ordinance where applicable (such as design of grease traps).

## Also included and made part of this manual

**Davie County Public Utilities Proposed Line Extension, Cost Sharing and Reimbursement Policy** (adopted 3/7/16)

### Detailed Construction Standards

Special reference is made to the Notes shown in items:

1.01 – Trench and Utility Notes;
2.01 – Water General Notes;
5.01 - Gravity Sewer General Notes; and
5.02 – Sewer Forcemain general Notes.

# Davie County Public Utilities Proposed Line Extension, Cost Sharing, and Reimbursement Policy

## Purpose

The purpose of this policy is to set forth the principles and guidelines for the extension of water and sewer service.

### Line Extensions

A. Individuals, property owners, and developers shall be responsible for all costs needed to extend water and sewer service regardless of whether the property is residential or non-residential and regardless of the distance needed to extend service to a given property or service area.

B. Individuals requesting water and sewer main extensions shall make written application to the Davie County Public Utilities (the County). The County shall create an extension agreement with the applicant with any necessary additional provisions to the project. Once this is complete, the applicant shall execute an extension agreement with the County, furnish all items required for the plan review process including engineering plans, maps, surveys, profiles, calculations, etc. for the proposed water and sewer extensions as required by the County, obtain and submit to the County all applicable approvals and permits necessary to construct the project, and follow all County codes, ordinances, standards, construction specifications, land use plans, and approved plans applicable to the construction project.

C. All new water and sewer systems serving developments shall tie into the County system if any portion of the development is within 1000 linear feet of any portion of the County system. All engineering and construction expenses shall be borne by the developer or individual seeking the tap. All other developments are encouraged to connect into the County system under the same arrangement.

D. All water and sewer line extension engineering and design shall be performed by a North Carolina registered professional engineer and shall be installed by a state licensed utility contractor.

E. A hydraulic study shall be required on all water main and sewer extensions at no cost to the County. The results of the study shall meet minimum flow and pressure as set forth by the County. The study shall include all of the following variables: (1) domestic water

usage, (2) fire services, and (3) yard irrigation, (4) scouring velocity, (5) lift station flow capacity.

F. The minimum size water line in any case shall be six inches.

G. In accordance with N.C.G.S.153A-457, as amended from time to time, the County will provide notice to all affected property owners and adjacent property owners prior to any wastewater system construction.

H. For matters of public health, such as the failing of septic tanks/well or poor water quality, property owners with property that lies within 1,000 yards of existing Davie County water and sewer mains may petition the County to connect to Davie County's water or sewer system. The petition must be submitted to both the Davie County Manager and the Clerk to the Board of Commissioners for consideration by the Board of County Commissioners.

1. In accordance with N.C.G.S. 153A-210.3, as amended from time to time, the petition must be signed by: (a) at least a majority of the owners of real property to be assessed and (b) owners who represent at least 66% of the assessed value of all real property to be assessed. Once the petition meets these requirements, the Board of County Commissioners will hold a public hearing on the proposed assessment.

2. Water and/or sewer main extensions and appurtenant facilities installed by Davie County will be financed 100% by property owners through special assessments. The cost of the assessment project, as determined by Davie County, shall be assessed against each of the lots or parcels determined by Davie County as benefiting from the project. The assessment shall be in accordance with the provisions of North Carolina General Statutes 153A, Article 9, Special Assessments. The County shall endeavor to search for grant funding whenever same is available to assist the property owners with the cost associated with the extensions.

3. The assessment will be paid annually by residents benefiting from the project for a period of 7 years, with interest on the unpaid amount at the rate of eight (8%) percent per year on any unpaid balances.

I. Any new water and/or sewer system connected to the County system shall be immediately dedicated to the County, at no cost to the County, upon completion of installation and once all required inspections have been performed. The developer shall hold a minimum one-year warranty on the new system(s). Any defects in material, workmanship, and installation discovered within the stated time period will be repaired at the developer's expense. The developer shall provide the following information upon completion of the system(s): (1) all required test results (required before system is activated), (2) two hard copies and an electronic copy in a format that meets the County's specifications of the as built-drawings, (3) cover page on the as built-drawings with an engineer's certification and final approval letter and DWQ, and (4) total cost of

installation and length of system, and (5) performance bond for a one year warranty period.

J. Any connection or extension to the Davie County water or sewer system must be reviewed to verify the capacity from the connection or extension can be handled by the existing water and/or sewer system. When a connection or extension is made to the Davie County water and sewer system that adds capacity of 5,000 gallons per day or less, the application will be reviewed and adjudicated by Davie County Public Utilities staff, after the capacity is verified. If the verified capacity added to the system is above 5,000 gallons per day, Davie County Public Utilities staff will recommend the application for extension or connection to the Board of County Commissioners for review and adjudication. If the capacity granted changed property or the use changes from that which was originally requested, the request must come back to either the board or utilities director/manager who approved the original request to be re-approved.

K. To ensure compliance with flow recommendations of the North Carolina Department of Environment and Natural Resource 2T rules, Davie County requires all applications for extensions, connections or capacity increases to be "shovel ready" projects which projects must be commenced within 12 months of approval and completed within three years of approval. If the project is not commenced or completed within the above time periods, the County may elect to withdraw the approval. In such event, the County may, at the discretion of the Davie County Board of County Commissioners, refund up to a total of fifty (50%) percent of the amounts paid for the allocation by the developer or citizen.

L. Based on recommendations from the County Manager and/or Public Utilities Director, the Davie County Commission has the discretion to determine if the County will share in the cost of a line extension project to areas identified in the County's master plan by reimbursing a developer for a portion of costs associated with extending utility service.

M. When a developer extends a utility line, the County may require the line be oversized – either a larger sized line or greater length of line so that future service can be provided. If it is necessary or desirable in the opinion of the County, the County reserves the authority to require the installation of an oversized water or sewer main. The developer is responsible for all costs associated with oversizing the extension to the construction specifications required by the County and as identified in the plan review process in Section B of this policy. The County will not reimburse the developer for the resulting difference in cost for the greater length, width, capacity, or quality of infrastructure the County has required.

N. When a developer extends a water and/or sewer line, the County will not reimburse the developer for any new connections made by other property owners to the water and/or sewer line constructed by the developer.

O. Developers are responsible for all costs associated with the acquisition of right-of-way (easements). When extensions require the purchase of private property to construct and/or

maintain a public utility; the applicant may utilize County services to acquire such for the necessary easements after the applicant can show that his attempts at negotiating a settlement have failed. The applicant shall attempt to acquire the necessary right-of-way through reasonable efforts, up to and including procuring a certified appraisal for the value of the easement and offering said value to the owner.

P. All easements obtained by the developer will meet the construction specifications of the County.

Q. All easements obtained by the developer will be conveyed to the County immediately upon completion and dedication of any new water and/or sewer system connected to the County.

R. Before the approval of any extensions of water or sewer lines by the County, the Commissions shall require an impact assessment of county infrastructure, including but not limited to the following items to determine that such extension is economically feasible and supported by the current water and sewer system:

   a. Schools
   b. Transportation
   c. Law enforcement and/or EMS services
   d. Existing water and sewer lines
   e. Remaining capacity of water and sewer system

   The developer shall be responsible for any cost associated with the impact assessment for the items a-d, above. In the event the developer has already been required to obtain any or all of the above impact assessments for Davie Developmental Services, the County will allow the developer to use the same assessments to meet the above requirements.

S. Notice. As soon as a developer contacts the Water and Sewer Department of the County requesting either sewer allocation or line extensions, the Director of Water and Sewer shall notify the County Manager, who shall have the request posted on the County's website, sent to the "sunshine list", and notify the County Commissioners in his or her next weekly report.

Adopted the 7 day of March, 2016.

Davie County Board of County Commissioners
By: _____
Terry Renegar, Chairman

Attested to: _____
Stacy Moyer, Clerk to the Board

# Davie County Utility Details

## 1.0 Trench & Pipe Details


**1.01** Trench and Utility Notes
**1.02** Embedment Soil Material Classification
**1.03** Std. Trench Backfill
**1.04** Trench Backfill for Water
**1.05** Pipe Construction Notes
**1.06** Encasement Pipe & Spacer Detail
**1.07** Std. Pavement Repair
**1.08** Cap & Tee Thrust Blocks
**1.09** Compression Thrust Block At Bends
**1.10** Tension Thrust Blocks Anchorage At Bends
**1.11** Deadmen Thrust Block
**1.12** Pipe Length Calculation Aide


## 2.0 Water Notes, Hydrant & Fittings


**2.01** Water Main General Notes
**2.02** Std. Fire Hydrant
**2.03** Std. Fire Hydrant With Swivel
**2.04** Valve Cover Concrete Pad
**2.05** Std. Cross Connection
**2.06** Std. 'U' Connection
**2.07** Blow-Off Hydrant at 2" End
**2.08** Blow-Off Hydrant


## 3.0 Water Meters


**3.01** 0.75" Water Service
**3.02** 1" Water Service
**3.03** 1" Water Service with 2" Valve
**3.04** 1.5" Water Service
**3.05** 2" Water Service
**3.06** Water Service Connections for 2" and 3" with 2" Meter
**3.07** 2" Water Meter & 2" RPZ , 1 of 2
**3.08** 2" Water Meter & 2" RPZ , 2 of 2
**3.09** 3" Water Meter Vault in 4" Main
**3.10** 4" Water Meter Vault in 6" Main
**3.11** 6" Water Meter Vault


## 4.0 Reduced Pressure Backflow Preventers (RPZ) & Fire Line


**4.01** 0.75" Reduced Pressure Backflow Preventer
**4.02** 1" Reduced Pressure Backflow Preventer
**4.03** 1.5" Reduced Pressure Backflow Preventer
**4.04** 2" Reduced Pressure Backflow Preventer
**4.05** 3" Reduced Pressure Backflow Preventer
**4.06** 4" Reduced Pressure Backflow Preventer
**4.07** 6" Reduced Pressure Backflow Preventer
**4.08** 8" Reduced Pressure Backflow Preventer
**4.09** 8" Fire Line RPZ & FDC in an Enclosure
**4.10** 8" Fire Line Building Entry


## 5.0 Sewer Notes & Structures


**5.01** Gravity Sewer General Notes
**5.02** Forcemain General Notes
**5.03** Precast Sanitary Sewer Manhole
**5.04** Horseshoe Manhole Construction
**5.05** Outside Drop Precast Manhole
**5.06** 8" Inside Drop Precast Manhole
**5.07** Outside 'Y' Drop Precast Manhole
**5.08** Flat Top Precast Manhole
**5.09** Manhole with Gate Valve & Electric Actuator


## 6.0 Sewer & Forcemain Miscellaneous


**6.01** 4" Sewer Service Connection
**6.02** Vent For Sanitary Sewer Manhole
**6.03** Antiseep/Anchor Collar
**6.04** FM Outlet Into Manhole
**6.05** FM Outlet Inside Drop Manhole
**6.06** Air Relief Valve & Air/Vacuum Valve Manhole

# TRENCH AND UTILITY NOTES

1. FOLLOW ALL OSHA GUIDELINES FOR SAFETY. FOR SHORING, FIELD DETERMINE SOIL CLASSIFICATION TYPE.
2. PERFORM ALL WORK TO NCDOT STANDARDS.
3. PROVIDE CONTINUOUS TRAFFIC FLOW IN AT LEAST ONE LANE DURING CONSTRUCTION.
4. PROVIDE TRAFFIC CONTROL IN ACCORDANCE WITH THE 'NORTH CAROLINA MANUAL ON UNIFORM TRAFFIC CONTROL DEVICES'.
5. PROVIDE NEAT SAWCUT EDGES WHEN PAVING IS REMOVED. PAVEMENT OPEN CUT SHALL BE 7 FT WIDE MINIMUM.
6. RESTORE AND REPAIR DAMAGED DRIVES, WALKS AND FIXTURES.
7. SEE TRENCH BACKFILL DETAIL FOR SOIL COMPACTION.
8. EACH DAY CLEAN UP AND KEEP STREETS FREE OF ALL DEBRIS EXCEPT AS APPROVED BY ENGINEER.
9. REMOVE ROCK IN ACCORDANCE WITH ALL SAFETY REGULATIONS AND COORDINATE BLASTING WITH ENGINEER
10. COORDINATE EXISTING FIBER OPTICAL CABLE CONFLICTS WITH UTILITY COMPANIES.
11. WHEN DIGGING BESIDE UTILITY POLES CONTACT THE UTILITY COMPANY FOR THEM TO STABILIZE POLE AND ADJUST GUY WIRE TO ACCOMMODATE NEW PIPE.
12. VERIFY LOCATION OF UTILITIES.
    'NC ONE CALL CENTER' '811' OR (800)632-4949
13. UTILITY REPAIR PHONE NUMBERS IN DAVIE COUNTY ARE:

| | |
|---|---|
| DUKE ENERGY (W-S) | (336)917-2556 |
| ENERGY UNITED ELECTRIC CORP. | (336)751-2136 |
| PIEDMONT NATURAL GAS | (336)751-4957 |
| CENTURY LINK | (336)526-3294 |
| QWEST COMMUNICATIONS | (336)210-4402 |
| TIME WARNER COMMUNICATIONS | (336)785-3390 |
| YADKIN VALLEY TELEPHONE | (336)463-5074 |
| MOCKSVILLE WATER | (336)751-2519 |
| DAVIE COUNTY WATER | (336)753-6090 |

DAVIE COUNTY PUBLIC UTILITIES
daviecountyNC.gov
(336)753-6090

TRENCH AND UTILITY NOTES

11/12/15
GSB

SHEET: 1 OF 1
1.01

PAGE 1

# EMBEDMENT SOIL MATERIAL CLASSIFICATIONS

| CLASS | TYPE | DESCRIPTION OF SOIL MATERIAL |
|---|---|---|
| I * | -- | MANUFACTURED ANGULAR, GRANULAR MATERIAL, ¼ TO 1½ INCHES (6 TO 40MM) SIZE, INCLUDING MATERIALS HAVING REGIONAL SIGNIFICANCE SUCH AS CRUSHED STONE OR ROCK, BROKEN CORAL, CRUSHED SLAG, CINDERS OR CRUSHED SHELLS. |
| II ** | GW | WELL-GRADED GRAVELS AND GRAVEL-SAND MIXTURES, LITTLE OR NO FINES. 50% OR MORE RETAINED ON NO. 4 SIEVE. MORE THAN 95% RETAINED ON NO. 200 SIEVE. CLEAN. |
| | GP | POORLY GRADED GRAVELS AND GRAVEL-SAND MIXTURES, LITTLE OR NO FINES. 50% OR MORE RETAINED ON NO. 4 SIEVE. MORE THAN 95% RETAINED ON NO. 200 SIEVE. CLEAN. |
| | SW | WELL-GRADED SANDS AND GRAVELLY SANDS, LITTLE OR NO FINES. MORE THAN 50% PASSES NO.4 SIEVE. MORE THAN 95% RETAINED ON NO. 200 SIEVE. CLEAN. |
| | SP | POORLY GRADED SANDS AND GRAVELLY SANDS, LITTLE OR NO FINES. MORE THAN 50% PASSES NO. 4 SIEVE. MORE THAN 95% RETAINED ON NO. 200 SIEVE. CLEAN. |
| III *** | GM | SILTY GRAVELS, GRAVEL-SAND-SILT MIXTURES. 50% OR MORE RETAINED ON NO. 4 SIEVE. MORE THAN 50% RETAINED ON NO. 200 SIEVE. |
| | GC | CLAYEY GRAVELS, GRAVEL-SAND-CLAY MIXTURES. 50% OR MORE RETAINED ON NO. 4 SIEVE. MORE 50% RETAINED ON NO. 200 SIEVE. |
| | SM | SILTY SANDS, SAND-SILT MIXTURES. MORE THAN 50% PASSES NO.4 SIEVE. MORE THAN 50% RETAINED ON NO. 200 SIEVE. |
| | SC | CLAYEY SANDS, SAND-CLAY MIXTURES. MORE THAN 50% PASSED NO. 4 SIEVE. MORE THAN 50% RETAINED ON NO. 200 SIEVE. |
| IV | ML | INORGANIC SILTS, VERY FINE SANDS, ROCK FLOUR, SILTY OR CLAYEY FINE SANDS. LIQUID LIMIT 50% OR LESS. 50% OR MORE PASSES NO. 200 SIEVE. |
| | CL | INORGANIC CLAYS OF LOW TO MEDIUM PLASTICITY, GRAVELLY CLAYS, SANDY CLAYS, SILTY CLAYS, LEAN CLAYS. LIQUID LIMIT 50% OR LESS. 50% OR MORE PASSES NO. 200 SIEVE. |
| | MH | INORGANIC SILTS, MICACEOUS OR DIATOMACEOUS FINE SANDS OR SILTS, ELASTIC SILTS. LIQUID LIMIT GREATER THAN 50%. 50% OR MORE PASSES NO. 200 SIEVE. |
| | CH | INORGANIC CLAYS OF HIGH PLASTICITY, FAT CLAYS, LIQUID LIMIT GREATER THAN 50%. 50% OR PASSES NO. 200 SIEVE. |
| V | OL | ORGANIC SILTS AND ORGANIC SILTY CLAYS OF LOW PLASTICITY. LIQUID LIMIT 50% OR LESS. 50% OR MORE PASSES NO. 200 SIEVE. |
| | OH | ORGANIC CLAYS OF MEDIUM TO HIGH PLASTICITY. LIQUID LIMIT GREATER THAN 50%. 50% OR MORE PASSES NO. 200 SIEVE. |
| | PT | PEAT, MUCK AND OTHER HIGHLY ORGANIC SOILS. |

* SOILS DEFINED AS CLASS 1 MATERIALS ARE NOT DEFINED IN ASTM D2487.
** IN ACCORDANCE WITH ASTM D2487, LESS THAN 5% PASS NO. 200 SIEVE.
*** IN ACCORDANCE WITH ASTM D2487, LESS THAN 12% PASS NO. 200 SIEVE.
SOILS WITH 5% TO 12% PASS NO. 200 SIEVE FALL IN BORDERLINE CLASSIFICATION, E.G., GP-GC.

DAVIE COUNTY PUBLIC UTILITIES
(336)753-6090
daviecountyNC.gov

EMBEDMENT SOIL MATERIAL CLASSIFICATION

PAGE 2
SHEET: 1 OF 1 11/12/15 GSB
1.02

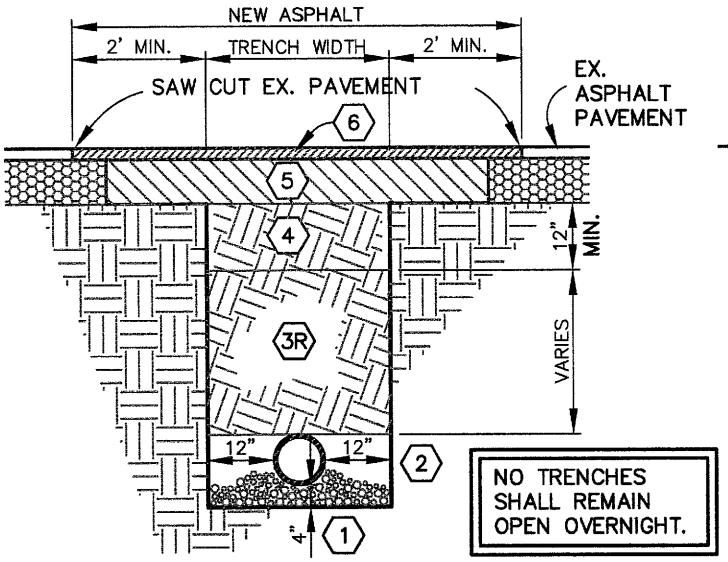


NO TRENCHES SHALL REMAIN OPEN OVERNIGHT.

## FLEXIBLE SEWER INSIDE PAVEMENT AREA

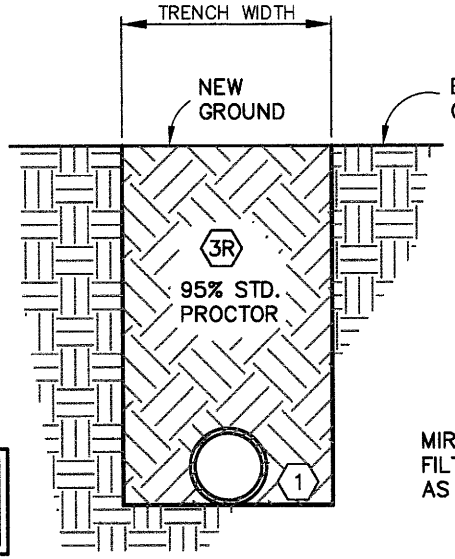


## WATER & RIGID SEWER INSIDE SHOULDER AREA

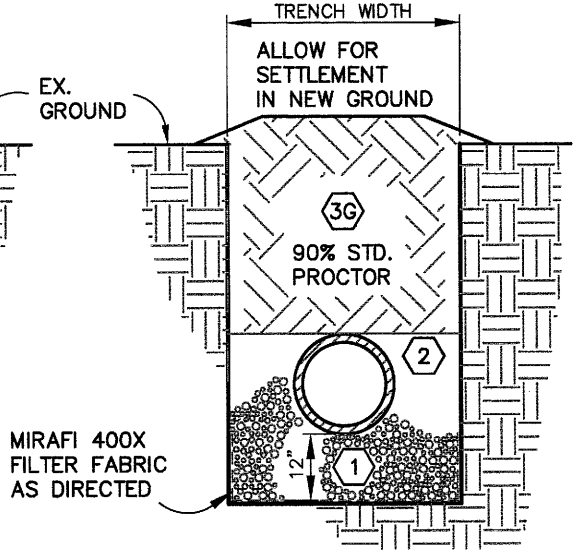


## FLEXIBLE SEWER OUTSIDE ROADWAY AREA

CONTRACTOR SHALL COMPLY WITH ALL OSHA REGULATIONS FOR TRENCH SHORING AND SLOPING. A "COMPETENT PERSON" AS DEFINED BY OSHA SHALL BE ON SITE AT ALL TIMES WHEN ANY WORKER IS IN A TRENCH.

SEE EMBEDMENT SOIL MATERIAL CLASSIFICATIONS TABLE FOR SOIL CLASSES. ADD WATER TO EACH LAYER AS NEEDED OR DIRECTED FOR COMPACTION AND MECHANICALLY TAMP THOROUGHLY.

## KEYNOTE FOR BEDDING PIPE

(1) PROVIDE CLASS I, II OR III SOIL FOR BEDDING. DIG BELL HOLES IN ACCORDANCE WITH MANUFACTURERS RECOMMENDATIONS.

A. FOR COMPETENT TRENCH BOTTOM AS DETERMINED BY ENGINEER
   1. PLACE FLEXIBLE SEWER PIPE ON 4" BEDDING OVER COMPETENT SOIL BOTTOM.
   2. PLACE RIGID SEWER AND FLEXIBLE AND RIGID WATER PIPE ON COMPETENT SOIL BOTTOM.

B. FOR NON COMPETENT TRENCH BOTTOM, PLACE ALL PIPE ON 12" BEDDING OVER MIRAFI 400X FILTER FABRIC OR AS DIRECTED BY ENGINEER.

C. SEWER PIPE REFERS TO BOTH STORM AND SANITARY. RIGID PIPE IS DUCTILE AND CONCRETE. FLEXIBLE PIPE IS PVC AND HDPE.

## KEYNOTES FOR TRENCH BACKFILL

(2) PROVIDE CLASS I, II OR III SOIL BACKFILL. COMPACT SOIL IN 6" LAYERS TO 95% OF STANDARD PROCTOR AROUND ALL FLEXIBLE SEWER PIPE.

(3R) PROVIDE FLOWABLE CLASS I, II, III OR IV SOIL BACKFILL. COMPACT IN 6" LAYERS TO 95% STANDARD PROCTOR DENSITY

(3G) PROVIDE FLOWABLE CLASS I, II, III OR IV SOIL BACKFILL. COMPACT IN 6" LAYERS TO 90% STANDARD PROCTOR DENSITY.

(4) PROVIDE FLOWABLE CLASS I, II, III OR IV SOIL BACKFILL. COMPACT IN 6" LAYERS TO 100% STANDARD PROCTOR DENSITY FOR TOP 1 FT OF SUBGRADE.

(5) SEE PAVING DESIGN TABLE FOR SUB-BASE, BASE AND BINDER.

(6) SEE PAVING DESIGN TABLE FOR SURFACE COURSE.

# STD. TRENCH BACKFILL

32 TRNCHFLL



PAGE 3

SHEET: 1 OF 1 11/12/15 GSB

1.03

STD. TRENCH BACKFILL

DAVIE COUNTY PUBLIC UTILITIES
daviecountyNC.gov (336)753-6090

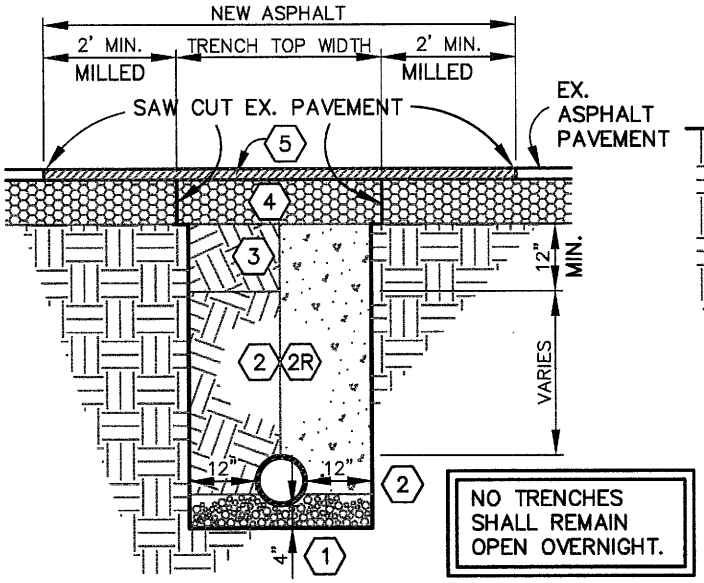


NO TRENCHES SHALL REMAIN OPEN OVERNIGHT.

## INSIDE PAVEMENT AREA

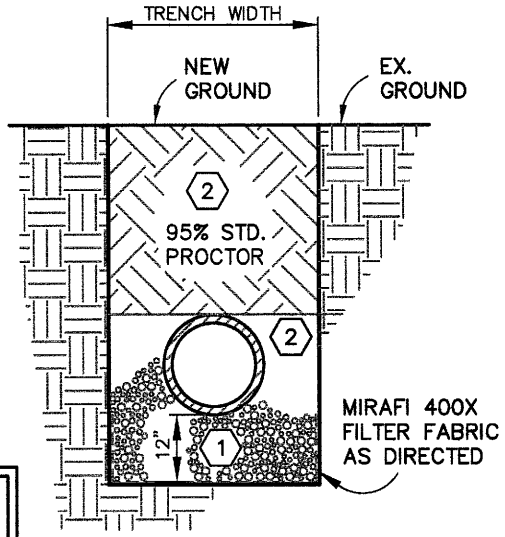


## OUTSIDE PAVEMENT AREA

CONTRACTOR SHALL COMPLY WITH ALL OSHA REGULATIONS FOR TRENCH SHORING AND SLOPING. A "COMPETENT PERSON" AS DEFINED BY 'OSHA' SHALL BE ON SITE AT ALL TIMES WHEN ANY WORKER IS IN A TRENCH.

SEE EMBEDMENT SOIL MATERIAL CLASSIFICATIONS TABLE FOR SOIL CLASSES. ADD WATER TO EACH LAYER AS NEEDED OR DIRECTED FOR COMPACTION AND MECHANICALLY TAMP THOROUGHLY.

## KEYNOTE FOR BEDDING PIPE

(1) PROVIDE CLASS I, II, III SOIL FOR BEDDING. DIG BELL HOLES IN ACCORDANCE WITH MANUFACTURERS RECOMMENDATIONS.

A. PLACE PIPE ON COMPETENT SOIL BOTTOM.

B. FOR NON COMPETENT TRENCH BOTTOM, PLACE PIPE ON 12" BEDDING OVER MIRAFI 400X FILTER FABRIC AS DIRECTED BY ENGINEER.

## KEYNOTES FOR TRENCH BACKFILL

(2) PROVIDE CLASS I, II, III OR IV SOIL BACKFILL. COMPACT SOIL IN 6" LAYERS TO 95% STANDARD PROCTOR DENSITY IN ALL PAVED AND SHOULDER AREAS AND TO 90% STANDARD PROCTOR DENSITY FOR ALL OTHER AREAS.

(2R) PROVIDE FLOWABLE FILL FOR HEAVY DUTY ASPHALT REPAIR, SEE PAVING DESIGN TABLE FOR SUBGRADE.

(3) PROVIDE CLASS I, II, III OR IV SOIL BACKFILL. COMPACT SOIL IN 6" LAYERS TO 100% STANDARD PROCTOR DENSITY FOR TOP 1 FT OF SUBGRADE.

(4) SEE PAVING DESIGN TABLE FOR PAVING.

(5) SEE PAVING DESIGN TABLE FOR SURFACE COURSE.

# TRENCH BACKFILL

32 TRNCHFLL-W



PAGE 4

SHEET: 1 OF 1 11/12/15 GSB

1.04

TRENCH BACKFILL FOR WATER

DAVIE COUNTY PUBLIC UTILITIES
daviecountyNC.gov (336)753-6090

# PIPE CONSTRUCTION NOTES:

1. FITTINGS SHALL BE CLASS 51 DUCTILE IRON MECHANICAL JOINTS WITH AN APPROPRIATE TRANSITION GASKET TO PVC WHERE APPLICABLE.

2. WHEN CONNECTING DUCTILE IRON PIPE TO PVC PIPE, USE AN APPROPRIATE TRANSITION GASKETS TO PVC BELL END AND A SLEEVE WITH APPROPRIATE GASKETS AT THE PLAIN END.

3. DEFLECTION AT THE JOINTS SHALL NOT EXCEED 14" FOR LENGTH OF PIPE OR 80% OF MANUFACTURER'S RECOMMENDATION, WHICHEVER IS LESS.

4. CASING PIPES SHALL BE BORED UNLESS OTHERWISE NOTED. SEE CASING PIPE SPACERS DETAIL.

5. LINE ALL PIPE STREAM CROSSINGS WITH CLASS 'B' RIPRAP IMMEDIATELY AFTER THE INSTALLATION OF NEW PIPE. SEE STREAM CROSSING DETAIL.

6. PROVIDE JOINT RESTRAINT AT ALL BENDS, TEES AND CAPS. JOINT RESTRAINT SHALL BE A COMBINATION OF CONCRETE THRUST BLOCKING ACCORDING TO DETAILS SHOWN AND MECHANICAL JOINT RESTRAINT AS APPROVED BY THE ENGINEER. MECHANICAL JOINT RESTRAINTS SHALL BE PLACED AT MULTIPLE LOCATIONS ON EACH SIDE OF FITTINGS ACCORDING TO MANUFACTURER'S RECOMMENDATION.

7. MECHANICAL JOINT RESTRAINT SHALL BE
   A. FOR DI PIPE TO MJ: CLOW MJ FIELD LOK, MEGLUG #1100, MIDCO #4 RESTRAINT, SMITH-BLAIR #981 OR STAR PIPE #3000, #3000S.

   B. FOR C900 PIPE TO MJ: CLOW MJ FIELD LOK, MEGLUG #2000PV, MIDCO #4 RESTRAINT, SMITH-BLAIR #981 OR STAR PIPE #4000, #1000C, #1200.

   C. FOR SDR-21 PIPE TO MJ: MEGLUG #2000PV MIDCO #4 RESTRAINT, SMITH-BLAIR #981 OR STAR PIPE #4000, #1000S. NOT APPLICABLE TO NEW PROJECTS.

   D. FOR PIPE BELL/SPIGOT RESTRAINT: SMITH-BLAIR #932, STAR PIPE #4100P, #1100.

8. CONCRETE THRUST BLOCK RESTRAINT AND SUBSURFACE SUPPORT SHALL BE 4000 PSI CLASS 'B' CONCRETE WITH 5% AIR ENTRAINMENT, 0.45 WATER/CEMENT RATIO AND PLACED AT A SLUMP NO GREATER THAN 3".

9. CONTRACTOR SHALL SUBMIT TO ENGINEER THE MODEL, MANUFACTURER AND TYPICAL PLACEMENT OF RESTRAINT SYSTEM TO BE USED ON PROJECT.

DAVIE COUNTY PUBLIC UTILITIES
(336)753-6090
daviecountyNC.gov

PIPE CONSTRUCTION NOTES

PAGE 5
SHEET: 1 OF 1 11/12/15 GSB
1.05

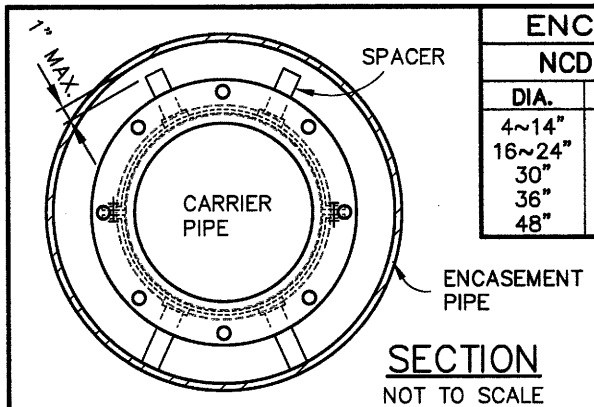


SECTION

NOT TO SCALE

| ENCASEMENT PIPE | | | |
|---|---|---|---|
| NCDOT | | NS-RR | |
| DIA. | THK. | DIA. | THK. |
| 4~14" | 0.188" | 4~10" | 0.188" |
| 16~24" | 0.250" | 12~14" | 0.250" |
| 30" | 0.312" | 16" | 0.281" |
| 36" | 0.375" | 18" | 0.312" |
| 48" | 0.500" | 20~22" | 0.344" |
| | | 24" | 0.375" |
| | | 30" | 0.469" |
| | | 36" | 0.532" |
| | | 42" | 0.625" |
| | | 48" | 0.688" |

## MATERIAL:

1. ENCASEMENT PIPE: STEEL ASTM 139-GR B. SEE PLAN FOR DIAMETER. SEE TABLE ABOVE FOR MINIMUM THICKNESS.
2. CARRIER PIPE: RESTRAINT JOINT M.J. CLASS 50 DUCTILE IRON CEMENT LINED AND ASPHALT COATED.
3. SPACERS: CASCADE MFG CCS-ER OR EQUAL. PROVIDE FOR RADIAL RESTRAINT OF CARRIER PIPE INSIDE ENCASEMENT PIPE.
4. END SEALS: CASCADE MFG MODEL CCES.

## INSTALLATION:

1. INSTALL (3)THREE SPACERS PER JOINT OF PIPE: (1)ONE AT EACH END AND (1)ONE IN THE MIDDLE OF PIPE.
2. AT LOW END OF ENCASEMENT PIPE PROVIDE 1" DIAMETER WEEP HOLE IN BOTTOM OF END SEAL.

# ENCASEMENT PIPE & SPACER DETAIL

12 SPACER



PAGE 6

SHEET: 1 OF 1 11/12/15 GSB

1.06

ENCASEMENT PIPE & SPACER DETAIL

DAVIE COUNTY PUBLIC UTILITIES
daviecountyNC.gov (336)753-6090

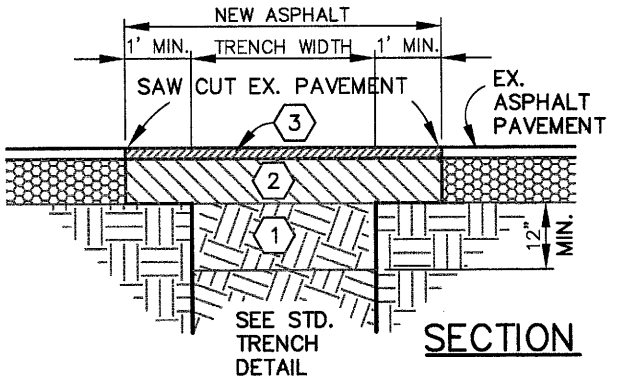


SECTION

## KEYNOTES

1. FOR TOP 1 FT OF SUBGRADE, PROVIDE FLOWABLE CLASS I, II, III OR IV SOIL BACKFILL COMPACTED IN 6" LAYERS TO 100% STANDARD PROCTOR DENSITY.
2. PROVIDE 4" I-19.0B OVER 7" B25.0B BASE COURSE
3. SEE PAVEMENT DATA TABLE FOR SURFACE COURSE.

# STD. PAVEMENT REPAIR

DO NOT USE FOR DIRECTIONAL BORING. 32 PAVE-REPAIR



PAGE 7

SHEET: 1 OF 1 11/12/15 GSB

1.07

STD. PAVEMENT REPAIR

DAVIE COUNTY PUBLIC UTILITIES
daviecountyNC.gov (336)753-6090

## CONCRETE DIMENSIONS

| DIM | MIN DIM FOR PIPE DIA(D)ø | | | | | |
|---|---|---|---|---|---|---|
| | 2–4" | 6" | 8" | 10" | 12" | 16" |
| A | 19" | 19" | 24" | 28" | 35" | 44" |
| B | 15" | 15" | 18" | 21" | 25" | 33" |
| C | 6" | 6" | 8" | 8" | 10" | 12" |

COVER FITTING WITH PLASTIC BEFORE PLACING CONCRETE

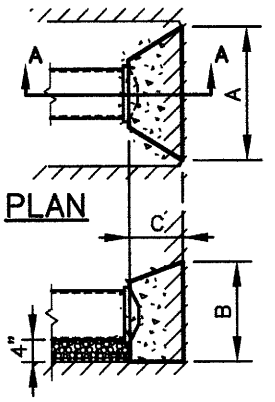


**CAP THRUST BLOCK**

THRBK1

## CONCRETE DIMENSIONS

| DIM | MIN DIM FOR PIPE DIA(D)ø | | | | | |
|---|---|---|---|---|---|---|
| | 2–4" | 6" | 8" | 10" | 12" | 16" |
| A | 6" | 6" | 8" | 12" | 12" | 16" |
| B | 8" | 8" | 10" | 12" | 15" | 20" |
| C | 8" | 8" | 9" | 10" | 12" | 14" |
| E | 6" | 6" | 8" | 8" | 8" | 10" |

COVER FITTING WITH PLASTIC BEFORE PLACING CONCRETE

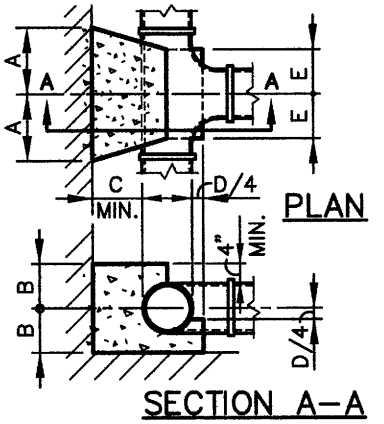


**TEE THRUST BLOCK**

THRBK2



PAGE 8

SHEET: 1 OF 1 11/12/15 GSB

1.08

CAP & TEE THRUST BLOCKS

DAVIE COUNTY PUBLIC UTILITIES
daviecountyNC.gov (336)753-6090

COVER FITTING WITH PLASTIC
BEFORE PLACING CONCRETE

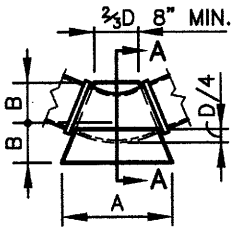


PLAN

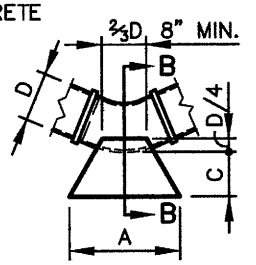


ELEVATION

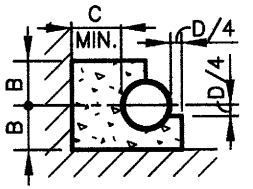


SECTION A-A

HORIZONTAL

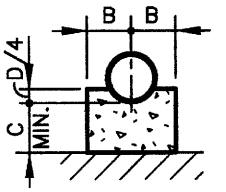


SECTION B-B

VERTICAL

## CONCRETE DIMENSIONS

| BEND DEG | DIM | MIN DIM FOR PIPE DIA(D)ø | | | | | |
|---|---|---|---|---|---|---|---|
| | | 2–4" | 6" | 8" | 10" | 12" | 16" |
| 1/32 11¼° | A | 6" | 6" | 8" | 10" | 12" | 16" |
| | B | 7" | 7" | 8" | 9" | 10" | 12" |
| | C | 7" | 7" | 7" | 8" | 8" | 9" |
| 1/16 22½° | A | 9" | 9" | 12" | 18" | 21" | 27" |
| | B | 7" | 7" | 7" | 8" | 10" | 12" |
| | C | 8" | 8" | 9" | 10" | 11" | 14" |
| ⅛ 45° | A | 15" | 15" | 20" | 25" | 30" | 40" |
| | B | 7" | 7" | 8" | 9" | 11" | 15" |
| | C | 8" | 8" | 9" | 10" | 11" | 15" |
| ¼ 90° | A | 18" | 18" | 24" | 31" | 36" | 49" |
| | B | 8" | 8" | 12" | 14" | 16" | 21" |
| | C | 9" | 9" | 10" | 11" | 12" | 16" |

COMPRESSION THRUST BLOCKS AT BENDS THRBK3



PAGE 9

SHEET: 1 OF 1 11/12/15 GSB

1.09

COMPRESSION THRUST BLOCKS AT BENDS

DAVIE COUNTY PUBLIC UTILITIES
daviecountyNC.gov (336)753-6090

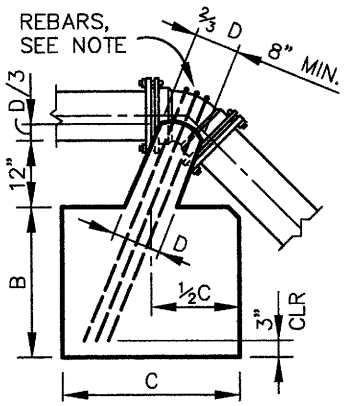


ELEVATION

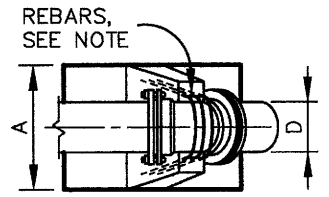


PLAN

## CONCRETE DIMENSIONS

| BEND DEG | DIM | MIN DIM FOR PIPE DIA(D)ø 2–4" | 6" | 8" | 10" | 12" | 16" |
|---|---|---|---|---|---|---|---|
| 1/32 11¼° | A | 16" | 18" | 18" | 17" | 36" | 42" |
| | B | 15" | 15" | 21" | 15" | 24" | 24" |
| | C | 21" | 24" | 30" | 33" | 36" | 48" |
| 1/16 22½° | A | 20" | 24" | 40" | 44" | 48" | 52" |
| | B | 21" | 21" | 27" | 30" | 30" | 30" |
| | C | 27" | 30" | 32" | 46" | 48" | 66" |
| 1/8 45° | A | 24" | 30" | 36" | 48" | 54" | 62" |
| | B | 30" | 30" | 33" | 36" | 42" | 48" |
| | C | 30" | 36" | 48" | 54" | 57" | 78" |

## NOTES:

1. EMBED 3–#6 REINFORCING STEEL MIN. OF 20" STRAIGHT OR 10" W/ 180° STD. HOOK
2. COVER FITTING WITH PLASTIC BEFORE PLACING CONCRETE

## TENSION THRUST BLOCKS ANCHORAGE AT BENDS

32 THRBK4



PAGE 10

SHEET: 1 OF 1 11/12/15 GSB

1.10

TENSION THRUST BLOCKS ANCHORAGE AT BENDS

DAVIE COUNTY PUBLIC UTILITIES
daviecountyNC.gov (336)753-6090

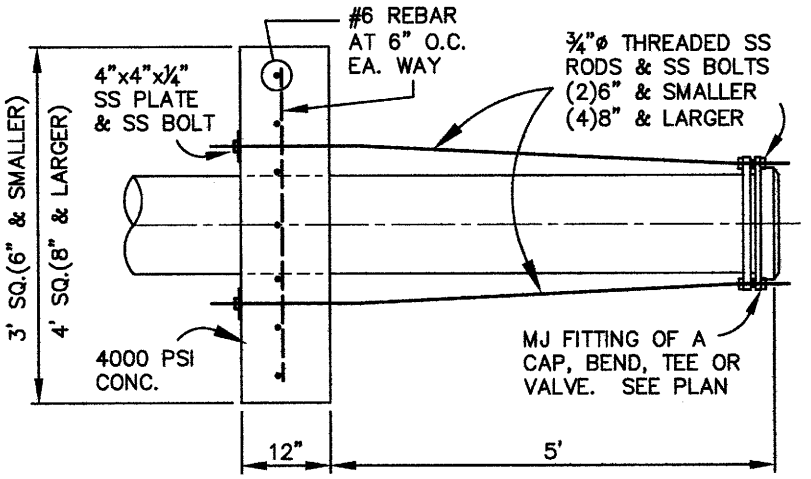


# DEADMAN THRUST BLOCK

24 THRBK_DEADMAN FTNG ALL



PAGE 11

| SHEET: 1 OF 1 11/12/15 GSB 1.11 | DEADMAN THRUST BLOCK | DAVIE COUNTY PUBLIC UTILITIES daviecountyNC.gov (336)753-6090 |
|---|---|---|

# PIPE LENGTH CALCULATION AIDE

| PIPE DIA. | 22½° 'C2' | BOTH 22½° 2x'C2'='E' | | 90° + 22½° 'A'+'C2'='E' | |
|---|---|---|---|---|---|
| 6" | 2" | 4" | 0.33' | 9" | 0.75' |
| 8" | 2.5" | 5" | 0.42' | 11.5" | 0.96' |
| 10" | 3" | 6" | 0.50' | 13.5" | 1.13' |
| 12" | 3.5" | 7" | 0.58' | 16" | 1.33' |
| 16" | 3.75" | 7.5" | 0.63' | 20" | 1.67' |

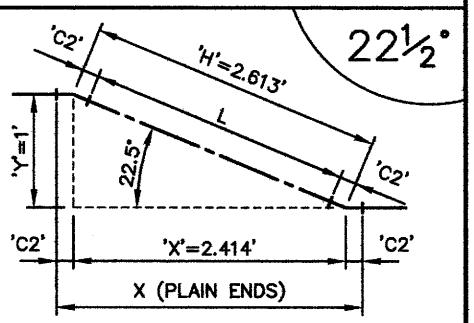


HORIZ DIST. (X)=(2.414 x 'Y')+'E'
PIPE LENGTH (L)=(2.613 x 'Y')−'E'

## CALCULATION STEPS:

1. VERIFY VERTICAL DIFFERENCE BETWEEN THE TWO PIPES ('Y').
2. DETERMINE ('E') FOR END CONDITIONS & PIPE SIZE
3. CALCULATE THE REQUIRED HORIZONTAL DISTANCE (X).
4. CALCULATE THE REQUIRED LENGTH OF SLOPED PIPE (L).

FOR COMPACT M.J. FITTING



PAGE 12

SHEET: 1 OF 1 11/12/15 GSB

1.12

PIPE LENGTH CALCULATION AIDE

DAVIE COUNTY PUBLIC UTILITIES
daviecountyNC.gov (336)753-6090

# WATER MAIN GENERAL NOTES:

1. WATER MAIN SHALL BE DR14 200 PSI C-900 PVC WHERE APPROPRIATE.

2. NCDENR PER SECTION .0904 REQUIRES PVC WATER MAIN TO HAVE 30" MINIMUM GROUND COVER.

3. NCDOT REQUIRES 36" MINIMUM OF COVER IN ROADWAY AREA.

4. DUCTILE IRON PIPE SHALL BE USED IF WATER MAIN DOES NOT MEET OR EXCEED THE FOLLOWING SEPARATION:
   A. 18" VERTICAL ABOVE CROSSING STORM OR SANITARY SEWER PIPE.
   B. 10' HORIZONTAL SEPARATION FROM PARALLEL SEWER PIPE.
   C. 10' HORIZONTAL FROM STREAM, LAKE OR WATER IMPOUNDMENTS.

5. CENTER ONE 20' SECTION OF DUCTILE IRON PIPE AT ALL CULVERT PIPE CROSSINGS. MAINTAIN 18" VERTICAL CLEARANCE BETWEEN NEW WATER LINE AND EXISTING PIPES.

6. DISINFECT, FLUSH AND PRESSURE TEST WATER MAIN IN ACCORDANCE WITH 'NCDENR' REGULATIONS.

DAVIE COUNTY PUBLIC UTILITIES
(336)753-6090
daviecountyNC.gov

WATER MAIN GENERAL NOTES

PAGE 1
SHEET: 1 OF 1 11/12/15 GSB
2.01

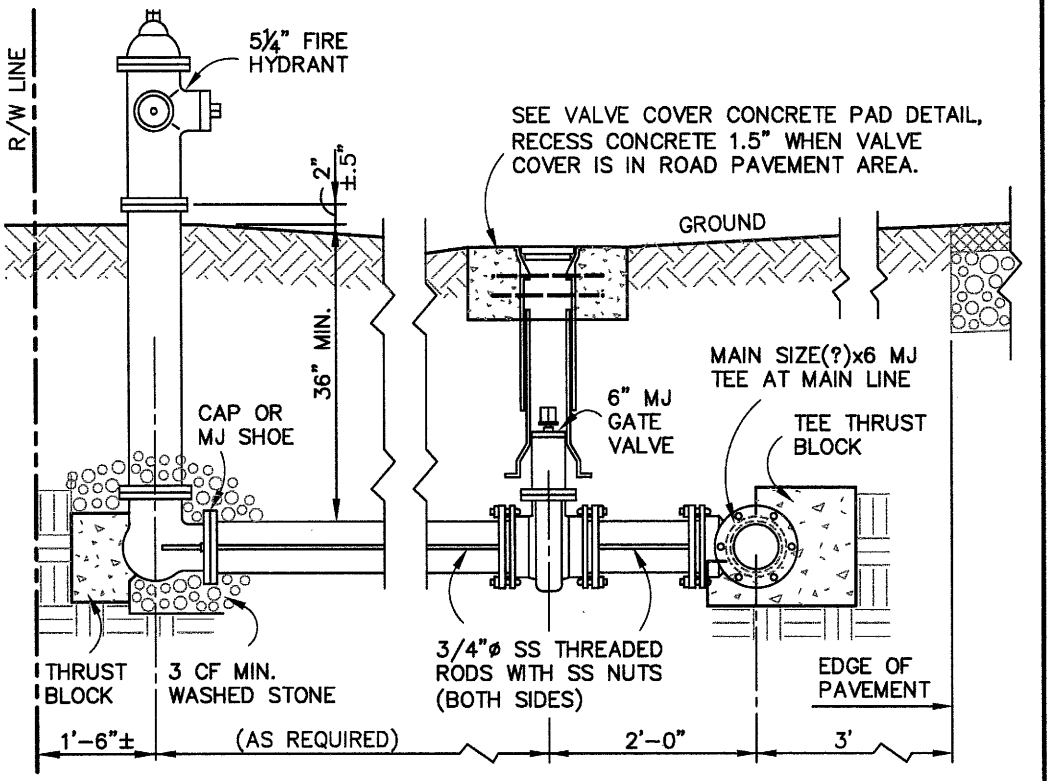


# STD. FIRE HYDRANT

DAVIE COUNTY STD 24 W-FHYD-DC



PAGE 2

SHEET: 1 OF 1 11/12/15 GSB

2.02

STD. FIRE HYDRANT

DAVIE COUNTY PUBLIC UTILITIES
daviecountyNC.gov (336)753-6090

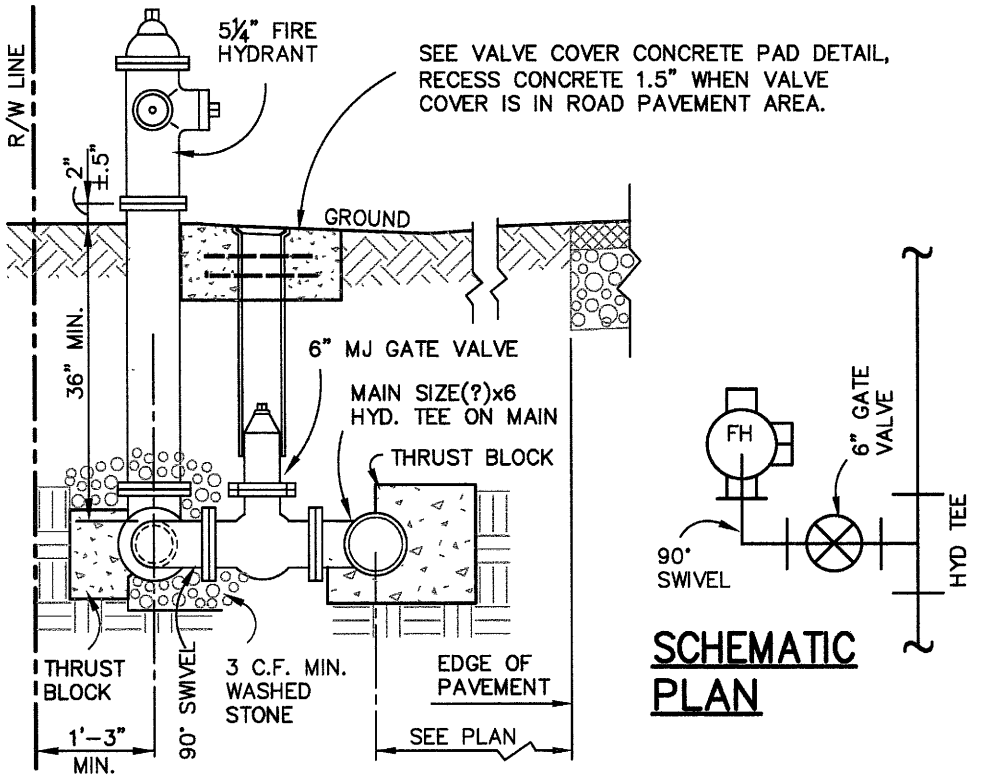


# STD. FIRE HYDRANT WITH SWIVEL

24 W-FHYD-SWIVEL



PAGE 3

SHEET: 1 OF 1 11/12/15 GSB

2.03

STD. FIRE HYDRANT WITH SWIVEL

DAVIE COUNTY PUBLIC UTILITIES
daviecountyNC.gov (336)753-6090

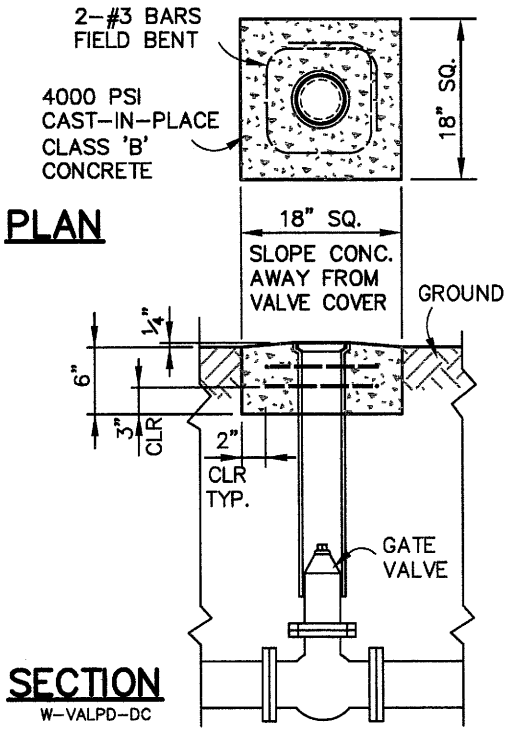


# VALVE COVER CONCRETE PAD

DAVIE CO. STD 32



PAGE 4

| | | |
|---|---|---|
| SHEET: 1 OF 1 11/12/15 GSB<br>2.04 | VALVE COVER<br>CONCRETE PAD | DAVIE COUNTY PUBLIC UTILITIES<br>daviecountyNC.gov (336)753-6090 |

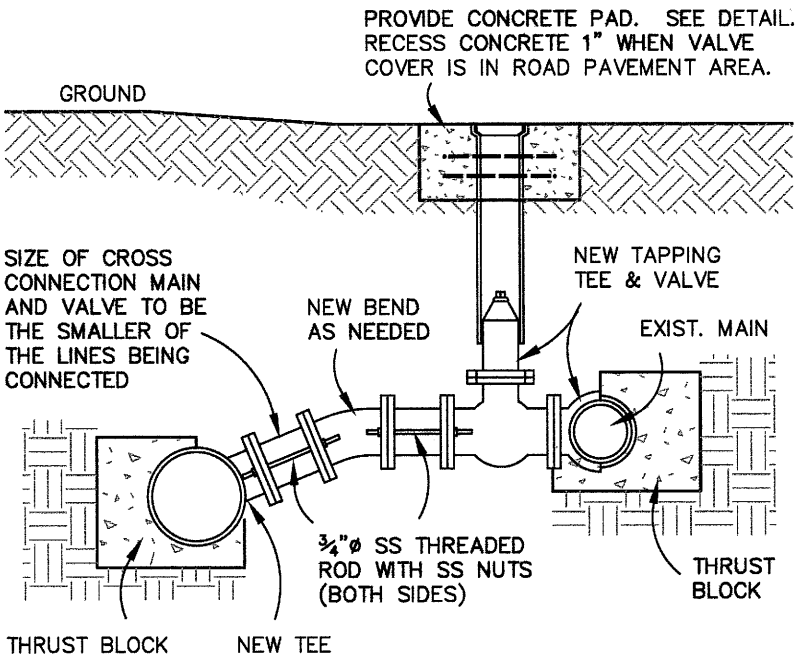


# STD. CROSS CONNECTION

24 W-CRSCON



PAGE 5

SHEET: 1 OF 1 11/12/15 GSB

2.05

STD. CROSS CONNECTION

DAVIE COUNTY PUBLIC UTILITIES
daviecountyNC.gov (336)753-6090

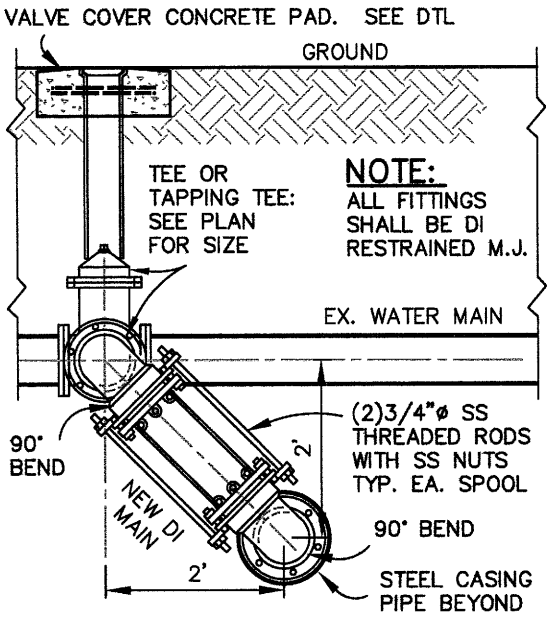


# STD. 'U' CONNECTION

24 W-UCON



PAGE 6

SHEET: 1 OF 1 11/12/15 GSB

2.06

STD. 'U' CONNECTION

DAVIE COUNTY PUBLIC UTILITIES
daviecountyNC.gov (336)753-6090

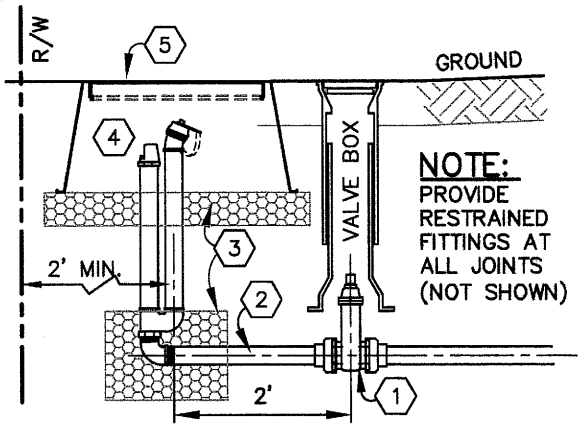


**NOTE:**
PROVIDE RESTRAINED FITTINGS AT ALL JOINTS (NOT SHOWN)

## MATERIAL KEYNOTES

1. 2" GATE VALVE WITH SQ. OPERATING NUT AND RESTRAINED TO MAIN
2. 2"ø SCH 40 BRASS OR COPPER PIPE
3. #57 WASHED STONE
4. BLOW-OFF HYDRANT: KUPFERLE #78 OR GIL INDUSTRIES 2" HIDDEN
5. METER BOX: PLASTIC BOX & CAST IRON LID EQUAL TO 'NDS' PRO 125CDMCIF SET TO GRADE ON 4" LAYER OF #57 WASH STONE.

# BLOW-OFF HYDRANT AT 2" END

DAVIE CO. STD 24 W-BLWOF 2END DC



PAGE 7

SHEET: 1 OF 1 11/12/15 GSB

2.07

BLOW-OFF HYDRANT AT 2" END

DAVIE COUNTY PUBLIC UTILITIES
daviecountyNC.gov (336)753-6090

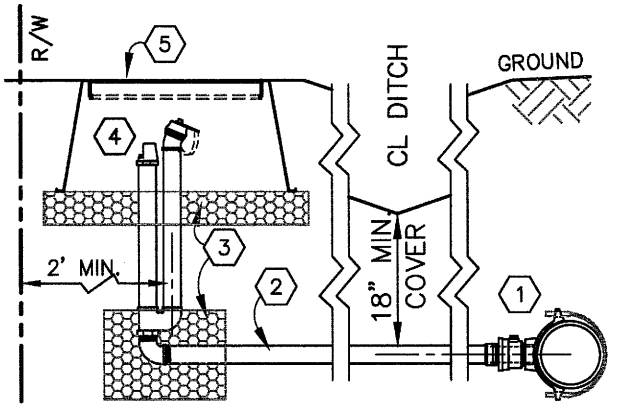


## MATERIAL KEYNOTES

1. 2" TAPPING SADDLE ON MAIN LINE. INSTALL SADDLE AND STOP PRIOR TO DISINFECTING MAIN LINE.
2. 2"ø SCH 40 BRASS OR COPPER PIPE
3. #57 WASHED STONE
4. BLOW-OFF HYDRANT: KUPFERLE #78 OR GIL INDUSTRIES 2" HIDDEN
5. METER BOX: PLASTIC BOX & CAST IRON LID EQUAL TO 'NDS' PRO 125CDMCIF. SET TO GRADE ON 4" LAYER OF #57 WASH STONE.

# BLOW-OFF HYDRANT

DAVIE CO. STD 24 W-BLWOF DC



PAGE 8

SHEET: 1 OF 1 11/12/15 GSB

2.08

BLOW-OFF HYDRANT

DAVIE COUNTY PUBLIC UTILITIES
daviecountyNC.gov (336)753-6090

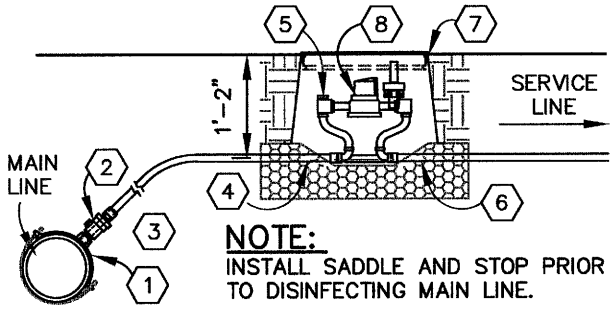


**NOTE:**
INSTALL SADDLE AND STOP PRIOR TO DISINFECTING MAIN LINE.

## WATER SERVICE MATERIAL

1. TAP TO MAIN: DRESSER #194 3/4" CC THREADS.
2. CORP. STOP: MUELLER H-15006 INSTA-TITE.
3. SERVICE PIPE: 3/4" 200 PSI SDR-9 CTS PE
4. FITTING: MUELLER H-14230 INSTA-TITE.
5. METER YOKE: MUELLER ⅝" H-1404N-2 7" HGT.
6. FITTING: MUELLER H-14222 F.I.P.
7. METER BOX: 14x19x12 PLASTIC BOX W/ HEAVY DUTY CAST IRON LID EQUAL TO 'NDS' D1200-CI SET TO GRADE ON 4" LAYER OF #57 WASH STONE.
8. METER: MUELLER HERSEY ⅝" 420 BLACK COMPOSITE WITH 'HOT ROD' AMR IN GALS, MODEL ⅝ 420 SG TRL6 CB 3'HRHP.

# 3/4" WATER SERVICE

DAVIE COUNTY STD 24 W-MTR DC

DAVIE COUNTY PUBLIC UTILITIES
daviecountyNC.gov
(336)753-6090

0.75" WATER SERVICE

PAGE 1
SHEET: 1 OF 1 11/12/15 GSB
3.01

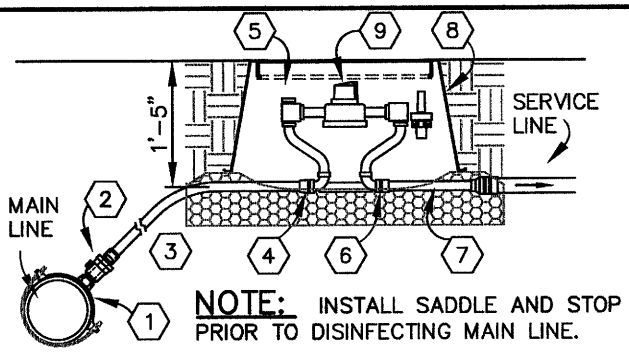


**NOTE:** INSTALL SADDLE AND STOP PRIOR TO DISINFECTING MAIN LINE.

## MATERIAL KEYNOTES

1. TAP TO MAIN: DRESSER #194 1" CC THREADS
2. CORP. STOP: MUELLER H15006
3. PIPE: 1" 200 PSI SDR-9 CTS PE
4. FITTING: MUELLER H14230
5. METER YOKE: MUELLER 1" H1404N-2 10" HGT.
6. FITTING: MUELLER H14222
7. OUTLET PIPE: TYPE "K" COPPER PIPE
8. METER BOX: 13X24X15 PLASTIC BOX & LID EQUAL TO 'NDS' PRO 125BCDWB SET TO GRADE ON 4" LAYER OF #57 WASH STONE.
9. METER: MUELLER HERSEY 452 WITH 'HOT ROD' AMR IN GALS.

# 1" WATER SERVICE

DAVIE COUNTY STD 24 W-MTR1 DC

DAVIE COUNTY PUBLIC UTILITIES
(336)753-6090
daviecountyNC.gov

1" WATER SERVICE

SHEET: 1 OF 1 11/12/15 GSB
3.02
PAGE 2

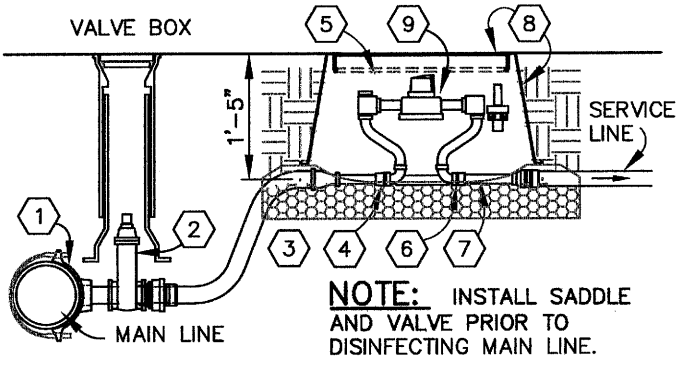


**NOTE:** INSTALL SADDLE AND VALVE PRIOR TO DISINFECTING MAIN LINE.

## MATERIAL KEYNOTES

1. TAP TO MAIN: 2" IPT SADDLE & BRASS NIPPLE
2. 2" GATE VALVE W/ SQ. OPERATING NUT & IPT TO COMP. COUPLING
3. SERVICE PIPE: TYPE 'K' COPPER 2" TO 1"
4. FITTING: MUELLER H14230
5. METER YOKE: MUELLER 1" H1404-2 10" HGT.
6. FITTING: MUELLER H14222
7. OUTLET PIPE: TYPE "K" COPPER PIPE
8. METER BOX: 13x24x15 PLASTIC BOX & LID EQUAL TO 'NDS' PRO 125BCDWB SET TO GRADE ON 4" LAYER OF #57 WASH STONE.
9. METER: MUELLER HERSEY 452 WITH 'HOT ROD' AMR IN GALS.

# 1" WATER SERVICE WITH 2" VALVE

24 W-MTR1 2VALV DC

DAVIE COUNTY PUBLIC UTILITIES
daviecountyNC.gov
(336)753-6090

1" WATER SERVICE WITH 2" VALVE

PAGE 3
SHEET: 1 OF 1 11/12/15 GSB
3.03

# 1.5" WATER METER

24

W-MTR1.5 DC

## MATERIAL KEYNOTES

1. PIPE: 1.5" TYPE 'K' COPPER
2. COUPLING: IPT-COMP
3. COUPLING: COMP-IPT

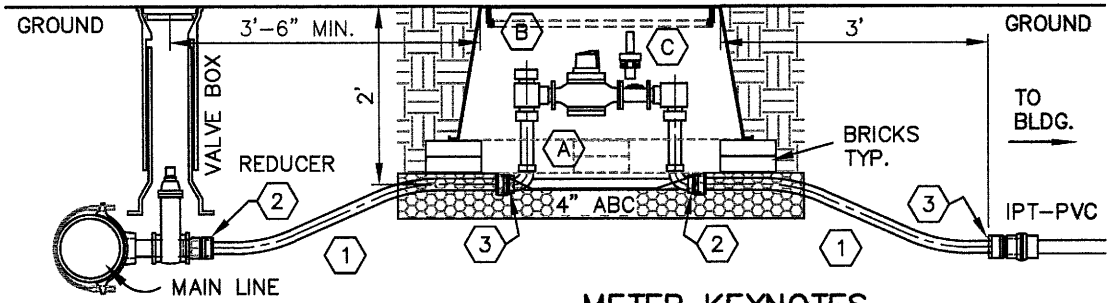


## NOTES:

1. INSTALL SADDLE AND VALVE PRIOR TO DISINFECTING MAIN LINE.
2. SET METER BOX ON BRICKS TO GRADE OVER A 4' MINIMUM BED OF #57 WASH STONE. (TWO BRICKS UNDER EACH CORNER & THE LONG SIDE MIDDLES, 12 BRICKS TOTAL)

## METER KEYNOTES

A. SETTER: FORD METER BOX WITH BALL VALVE BYPASS #VBH76-12B-11-66-NL-G, BALL VALVE INLET, ANGLE CHECK VALVE OUTLET

B. METER BOX: 17x30x18 PLASTIC BOX & LID EQUAL TO 'NDS' PRO 126BCDWB

C. METER: MUELLER FLANGED MVR100 WITH BRONZE BODY AND 'HOT ROD' AMR IN GALS.

## MATERIAL KEYNOTES

1. PIPE: 2" TYPE 'K' COPPER
2. COUPLING: IPT–COMP
3. COUPLING: COMP–IPT

# 2" WATER METER

24

W–MTR2 DC

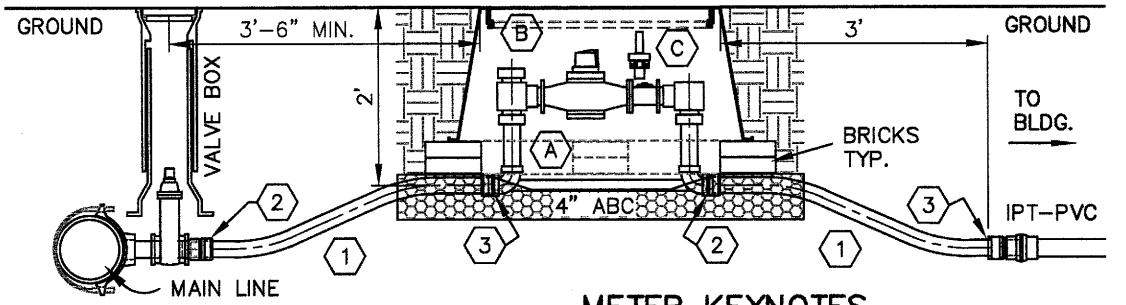


## NOTES:

1. INSTALL SADDLE AND VALVE PRIOR TO DISINFECTING MAIN LINE.
2. SET METER BOX ON BRICKS TO GRADE OVER A 4' MINIMUM BED OF #57 WASH STONE. (TWO BRICKS UNDER EACH CORNER & THE LONG SIDE MIDDLES, 12 BRICKS TOTAL)

## METER KEYNOTES

- (A) SETTER: FORD METER BOX WITH BALL VALVE BYPASS #VBH77–12B–11–77–NL–G, BALL VALVE INLET, ANGLE CHECK VALVE OUTLET
- (B) METER BOX: 17x30x18 PLASTIC BOX & LID EQUAL TO 'NDS' PRO 126BCDWB
- (C) METER: MUELLER FLANGED MVR160 WITH BRONZE BODY AND 'HOT ROD' AMR IN GALS.

**NOTES:**

1. INSTALL SADDLE AND VALVE PRIOR TO DISINFECTING MAIN LINE.
2. PROVIDE BRASS OR COOPER

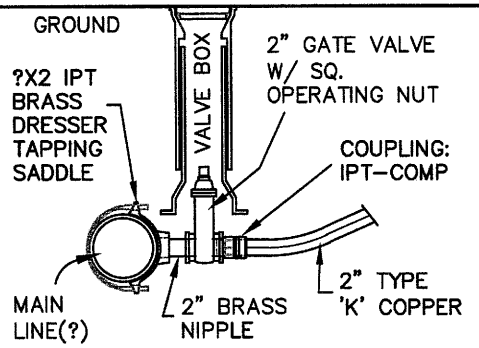


## 2" WATER SERVICE CONNECTION

24 W-SRVC2_CON DC

**NOTES:**

1. INSTALL SADDLE AND VALVE PRIOR TO DISINFECTING MAIN LINE.
2. PROVIDE MJ RESTRAINT

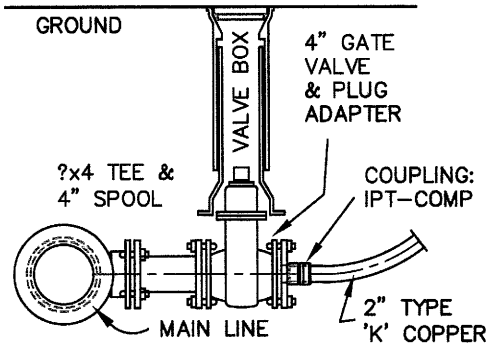


## 3" WATER SERVICE CONNECTION WITH 2" METER

24 W-SRVC3x2_CON DC



PAGE 6

SHEET: 1 OF 1 11/12/15 GSB

3.06

WATER SERVICE CONNECTIONS FOR 2" AND 3" WITH 2" METER

DAVIE COUNTY PUBLIC UTILITIES
daviecountyNC.gov (336)753-6090

## MATERIAL KEYNOTES

1. PIPE: 2" TYPE 'K' COPPER (USE 'STICK' PIPE FOR STRAIGHT SECTIONS SHOWN)
2. COUPLING: IPT–COMP
3. COUPLING: COMP–IPT
4. COUPLING: COMP–COMP

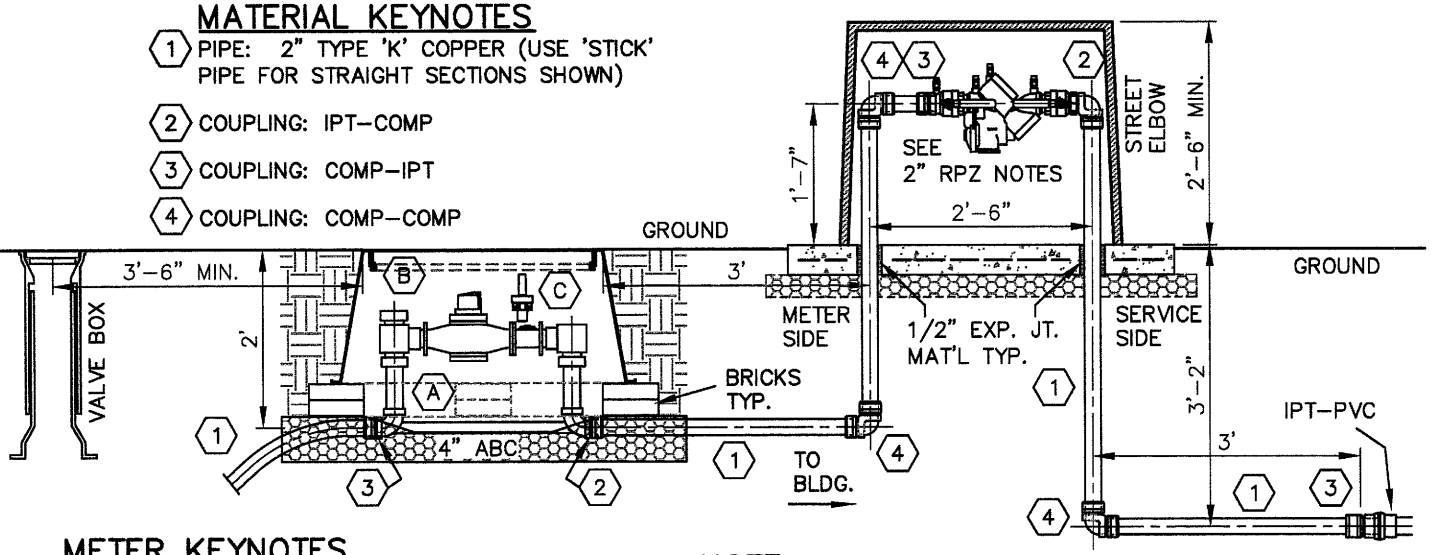


## METER KEYNOTES

- (A) SETTER: FORD METER BOX WITH BALL VALVE BYPASS #VBH77–12B–11–77–NL–G, BALL VALVE INLET, ANGLE CHECK VALVE OUTLET
- (B) METER BOX: 17x30x18 PLASTIC BOX & LID EQUAL TO 'NDS' PRO 126BCDWB
- (C) METER: MUELLER FLANGED MVR160 WITH BRONZE BODY AND 'HOT ROD' AMR IN GALS.

## NOTE:

1. SET METER BOX ON BRICKS TO GRADE OVER A 4' MINIMUM BED OF #57 WASH STONE. (TWO BRICKS UNDER EACH CORNER & THE LONG SIDE MIDDLES, 12 BRICKS TOTAL)

# 2 WATER METER & 2" RPZ

24 W–MTR2 +RPZ2 DC

## 2" RPZ NOTES:

1. BACKFLOW PREVENTER LOCATION REQUIRES PRIOR APPROVAL, MUST BE ON THE PROPERTY SIDE AND MUST NOT OBSTRUCT SIGHT DISTANCE. PROVIDE 36" CLEAR OUTSIDE OF ENCLOSURE ON ALL SIDES.

2. SLAB SHALL BE 3000 PSI CONCRETE, 51"LONG x 25"WIDE x 4"THICK WITH 6x6-W1.4XW1.4 WWF OVER 3" COMPACTED CRUSHED STONE.

3. REDUCED PRESSURE BACKFLOW PREVENTER SHALL BE A **'WATTS' 2" 909M1-QT** (OR EQUAL). SHUT-OFF VALVES SHALL BE FULL PORT, LINE SIZE AND 1/4 TURN BRONZE UNION BALL VALVES. NO BY-PASS WILL BE ACCEPTED.

4. PIPE RISERS AND BENDS SHALL BE 'STICK' TYPE 'K' COPPER OR BRASS FOR A MINIMUM OF 5 FT EACH SIDE OF VALVES.

5. THE ABOVE GROUND ENCLOSURE SHALL BE **'HOT-BOX' #HF013039028** (OR EQUAL) FIBERGLASS, INSULATED TO R8, HAVE A FLIP-TOP ACCESS, LOCKABLE SS HASP & (2)TWO DRAIN PORTS AT GRADE. COLOR BEIGE.

6. PROVIDE GFI RECEPTACLE MOUNTED 21" MINIMUM ABOVE THE SLAB.

7. THE ENCLOSURE SHALL BE HEATED WITH A 90W, 120V, 18 FT LONG HEAT TRACE CABLE.

DAVIE COUNTY PUBLIC UTILITIES
daviecountync.gov (336)753-6090

2" WATER METER & 2" RPZ

PAGE 8
SHEET: 2 OF 2 11/12/15 GSB
3.08

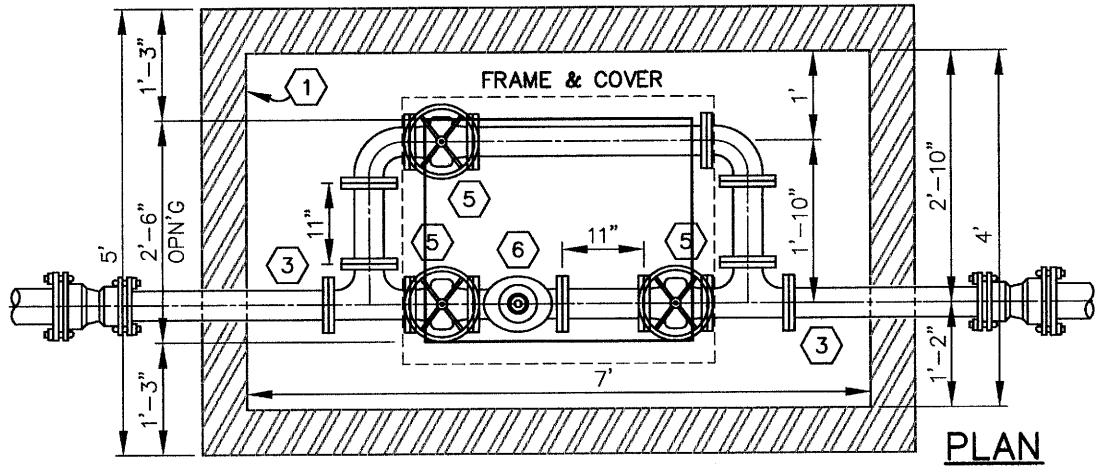


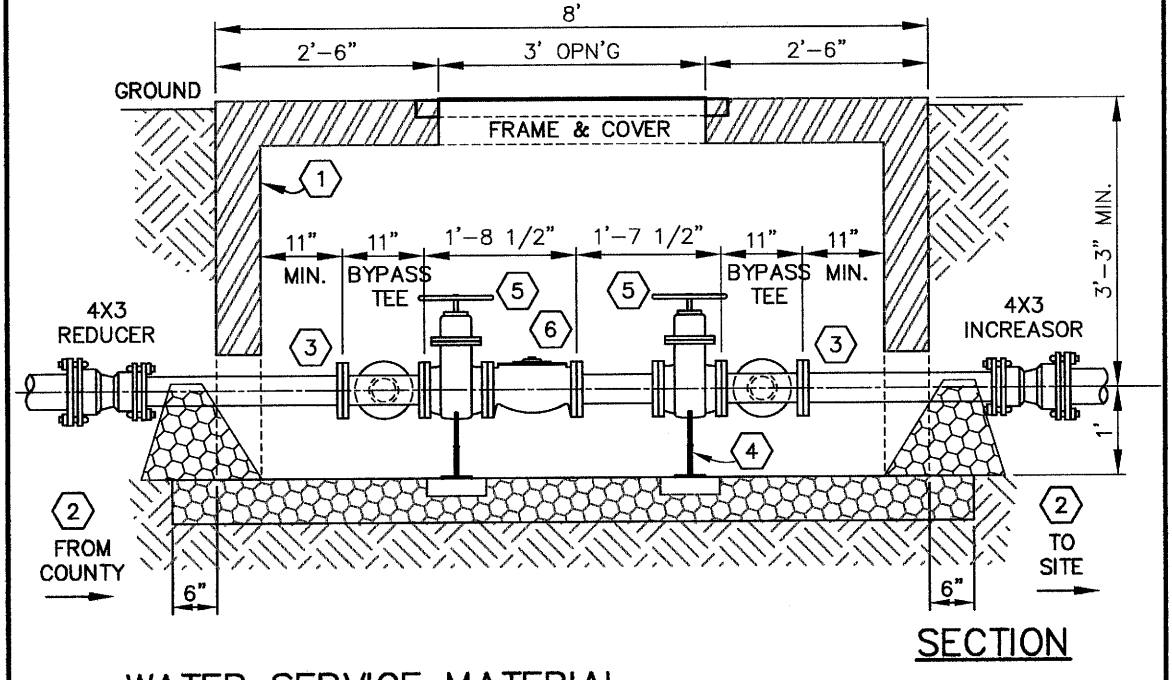


## WATER SERVICE MATERIAL

1. METER VAULT: STAY-RIGHT TANK CO. 7'x4' (INSIDE), PRECAST REINFORCED CONCRETE VAULT FOR HEAVY TRAFFIC WITH 2.5'x3' ALUMINUM ACCESS HATCH EQUAL TO HALLIDAY S1S3036. ALLOW 3" CLEAR BETWEEN PIPE AND VAULT.
2. WATER PIPE: CLASS 350 DUCTILE IRON PIPE INTO AND OUT OF CONCRETE VAULT. MAKE TRANSITION TO PVC PIPE OUTSIDE VAULT.
3. FLANGE TRANSITION COUPLING.
4. ADJUSTABLE PIPE SUPPORT: GRINNELL OR EQUAL AT EACH VALVE AS SHOWN WITH MINIMUM THREE BRICKS WIDE UNDER EACH SUPPORT.
5. VALVES: BRONZE NFS, OCC, AWWA GATE VALVES.
6. METER: 3" MUELLER MODEL MVR350 WITH HOT ROD (MOBILE) AMR.

# 3" WATER METER VAULT IN 4" MAIN

DAVIE COUNTY STD. 24 W-MTR3+BYPASS 4MAIN DC

DAVIE COUNTY PUBLIC UTILITIES (336)753-6090
daviecountyNC.gov

3" WATER METER VAULT IN 4" MAIN

11/12/15 GSB

SHEET: 1 OF 1 3.09

PAGE 9

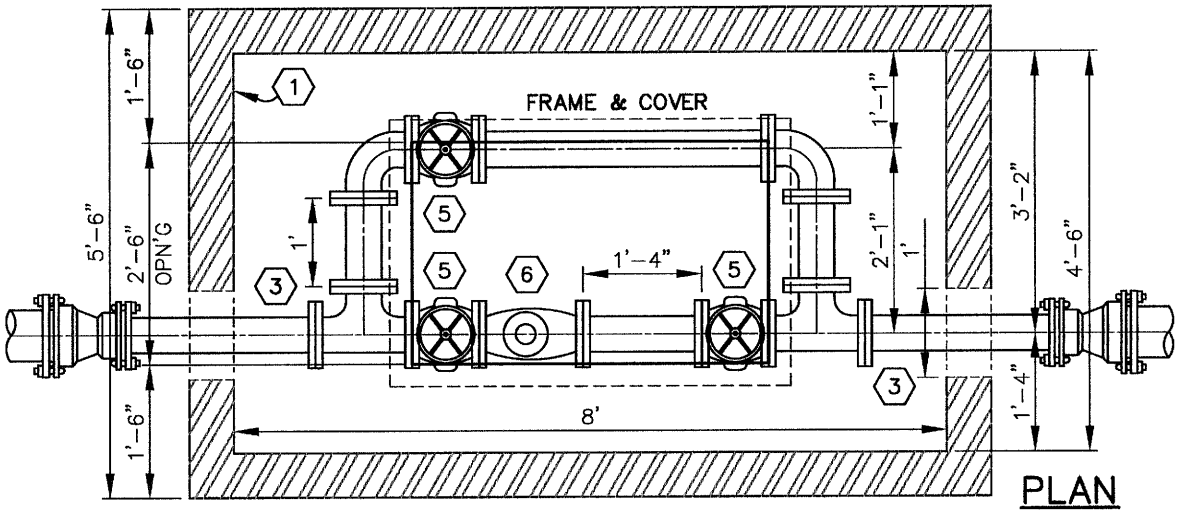


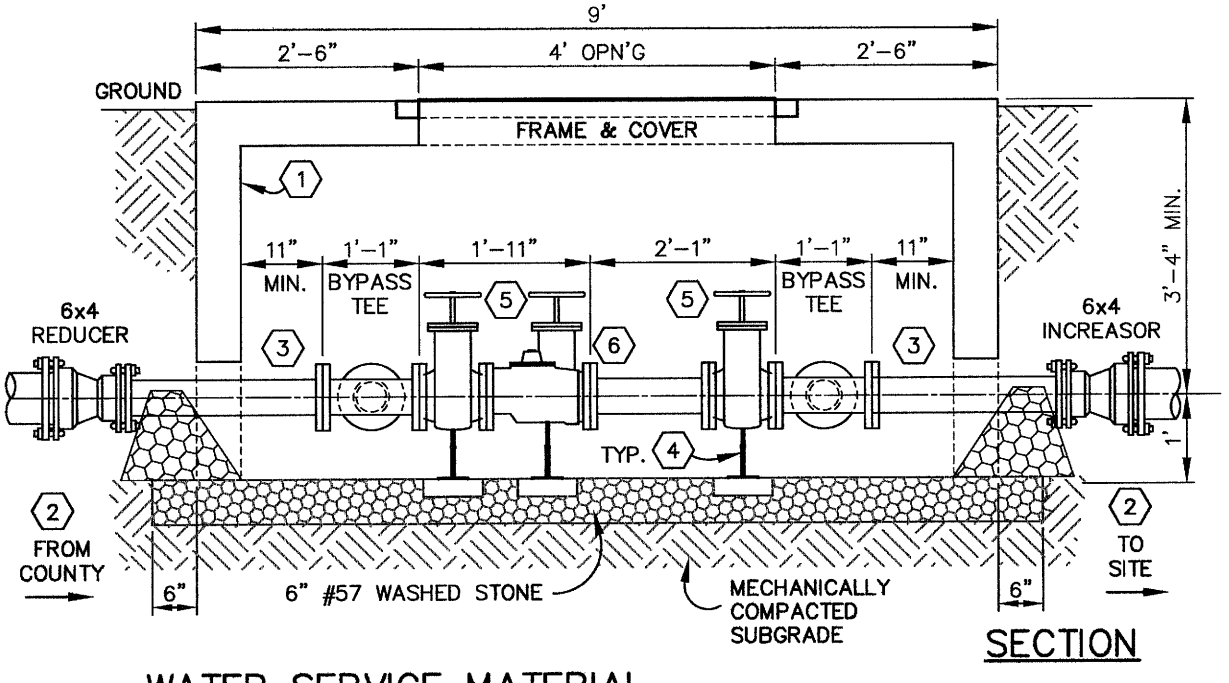


## WATER SERVICE MATERIAL

1. METER VAULT: STAY-RIGHT TANK CO. 8'x4.5' (INSIDE), PRECAST REINFORCED CONCRETE VAULT FOR HEAVY TRAFFIC WITH 2.5'x4' ALUMINUM ACCESS HATCH EQUAL TO HALLIDAY S1S3048. ALLOW 3" CLEAR BETWEEN PIPE AND VAULT.
2. WATER PIPE: CLASS 350 DUCTILE IRON PIPE INTO AND OUT OF CONCRETE VAULT. MAKE TRANSITION TO PVC PIPE OUTSIDE VAULT.
3. FLANGE TRANSITION COUPLING.
4. ADJUSTABLE PIPE SUPPORT: GRINNELL OR EQUAL AT EACH VALVE AS SHOWN WITH MINIMUM THREE BRICKS WIDE UNDER EACH SUPPORT.
5. VALVES: BRONZE NFS, OCC, AWWA GATE VALVES.
6. METER: 4" MUELLER MODEL MVR650 WITH HOT ROD (MOBILE) AMR.

# 4" WATER METER VAULT IN 6" MAIN

DAVIE COUNTY STD. 24 W-MTR4+BYPASS 6MAIN DC

DAVIE COUNTY PUBLIC UTILITIES (336)753-6090 daviecountyNC.gov

4" WATER METER VAULT IN 6" MAIN

11/12/15 GSB

SHEET: 1 OF 1 3.10

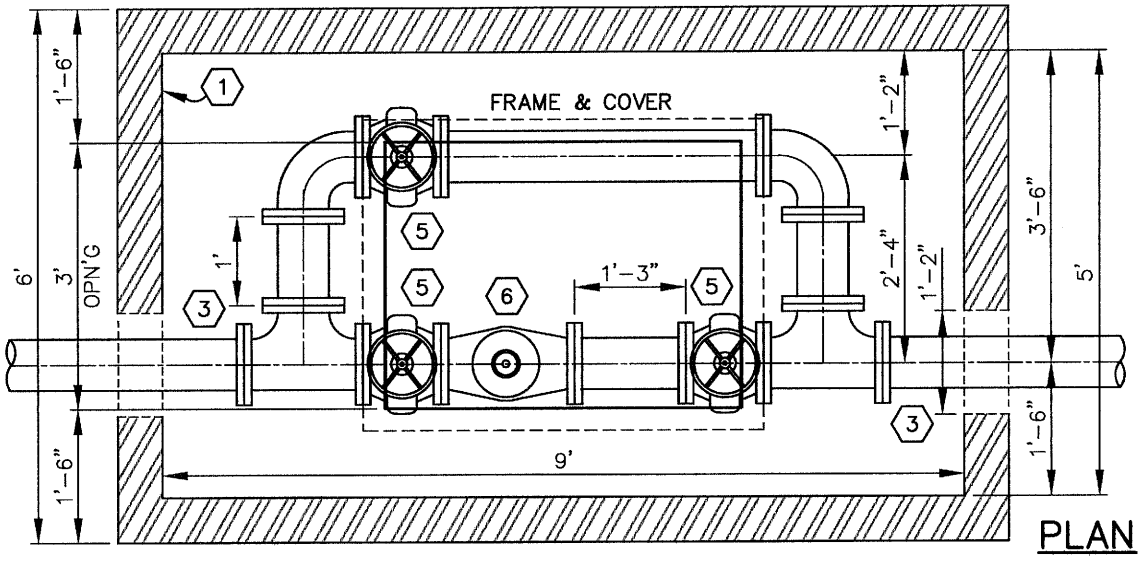


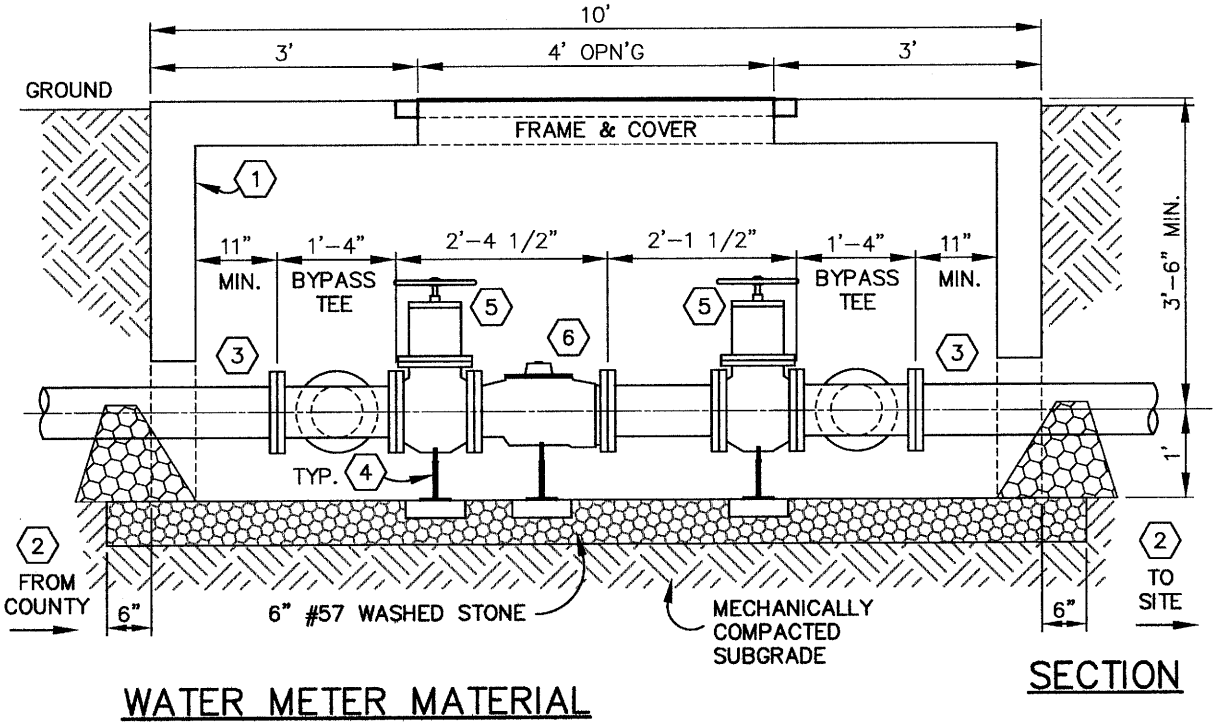


## WATER METER MATERIAL

1. METER VAULT: STAY-RIGHT TANK CO. 9'x5' (INSIDE), PRECAST REINFORCED CONCRETE VAULT FOR HEAVY TRAFFIC WITH 3'x4' ALUMINUM ACCESS HATCH EQUAL TO HALLIDAY S1S3648. ALLOW 3" CLEAR BETWEEN PIPE AND VAULT.
2. WATER PIPE: CLASS 350 DUCTILE IRON PIPE INTO AND OUT OF CONCRETE VAULT. MAKE TRANSITION TO PVC PIPE OUTSIDE VAULT.
3. FLANGE TRANSITION COUPLING.
4. ADJUSTABLE PIPE SUPPORT: GRINNELL OR EQUAL AT EACH VALVE AS SHOWN WITH MINIMUM THREE BRICKS WIDE UNDER EACH SUPPORT.
5. VALVES: BRONZE NFS, OCC, AWWA GATE VALVES.
6. METER: 6" MUELLER MODEL MVR1300 WITH HOT ROD (MOBILE) AMR.

# 6" WATER METER VAULT

DAVIE COUNTY STD. 24 W-MTR6+BYPASS DC

DAVIE COUNTY PUBLIC UTILITIES (336)753-6090 daviecountyNC.gov

6" WATER METER VAULT

PAGE 11 SHEET: 1 OF 1 11/12/15 GSB

3.11

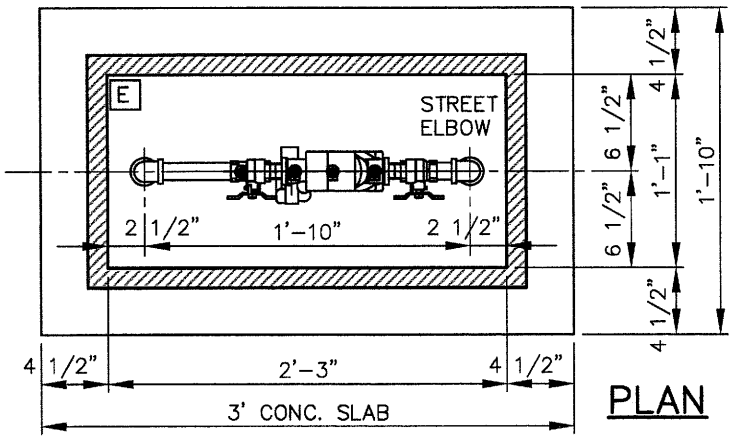


PLAN

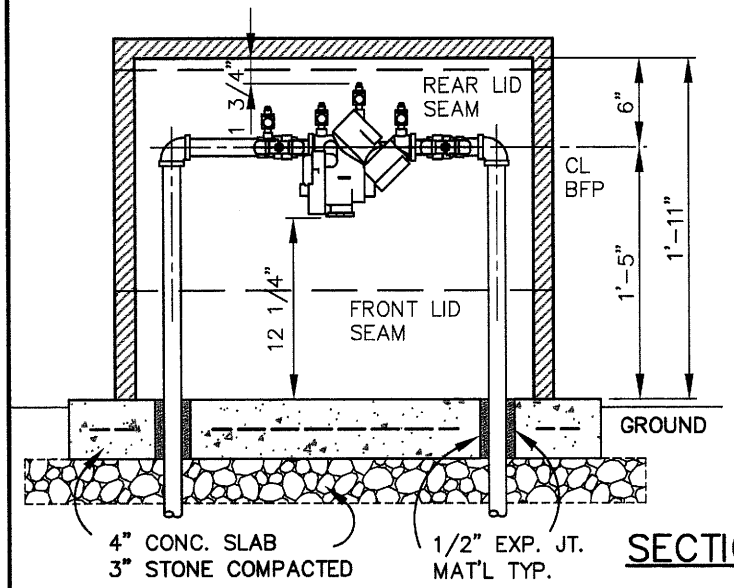


SECTION

## NOTES:

1. ALL DIMENSIONS ARE APPROXIMATE.
2. BACKFLOW PREVENTER LOCATION REQUIRES PRIOR APPROVAL, MUST BE WITHIN 10 FT OF METER ON THE PROPERTY SIDE AND MUST NOT OBSTRUCT SIGHT DISTANCE. PROVIDE 36" CLEAR OUTSIDE OF ENCLOSURE ON ALL SIDES.
3. SLAB SHALL BE 3000 PSI CONCRETE, 36"LONG x 22"WIDE x 4"THICK WITH 6x6-W1.4XW1.4 WWF OVER 3" COMPACTED CRUSHED STONE.
4. REDUCED PRESSURE BACKFLOW PREVENTER SHALL BE A **'WATTS' 3/4" 909-QT** (OR EQUAL). SHUT-OFF VALVES SHALL BE FULL PORT, LINE SIZE AND 1/4 TURN BRONZE UNION BALL VALVES.
5. PIPE RISERS AND BENDS SHALL BE 'STICK' TYPE 'K' COPPER OR BRASS FOR A MINIMUM OF 5 FT EACH SIDE OF VALVES.
6. THE ENCLOSURE SHALL BE A **'HOT-BOX' #HF013027023** (OR EQUAL) FIBERGLASS AND HAVE A FLIP-TOP ACCESS, LOCKABLE SS HASP & (2)TWO DRAINPORTS AT GRADE. COLOR BEIGE.
7. REQUIRED ELECTRICAL RECEPTACLE INDICATED BY E SHALL BE MOUNTED A MINIMUM OF 16" ABOVE THE SLAB.
8. THE ENCLOSURE SHALL BE HEATED WITH A 60W, 120V, 12 FT LONG HEAT TRACE CABLE.

# 3/4" REDUCED PRESSURE BACKFLOW PREVENTER

12

W-BX_RPBFP HB1 075 909-QT



PAGE 1

SHEET: 1 OF 1 11/12/15 GSB

4.01

0.75" REDUCED PRESSURE BACKFLOW PREVENTER

DAVIE COUNTY PUBLIC UTILITIES
daviecountyNC.gov (336)753-6090

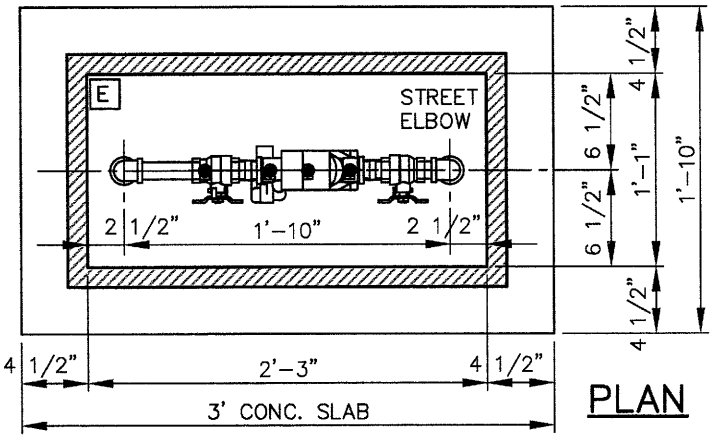


PLAN

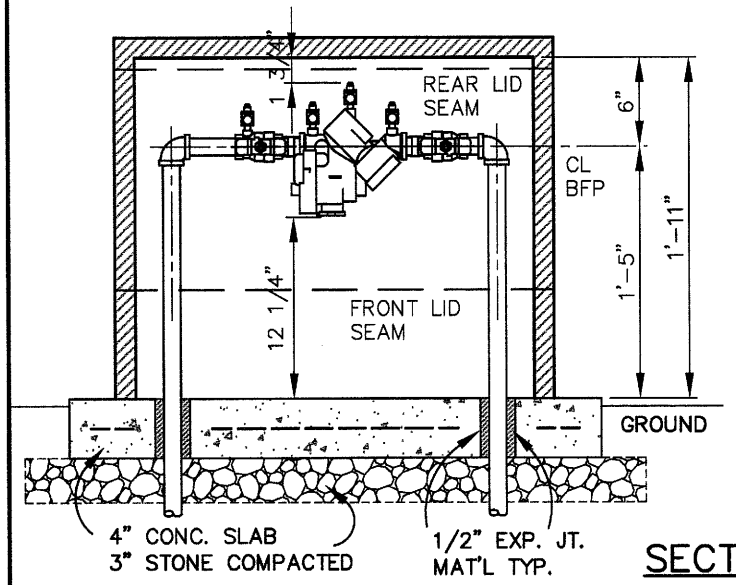


SECTION

## NOTES:

1. ALL DIMENSIONS ARE APPROXIMATE.
2. BACKFLOW PREVENTER LOCATION REQUIRES PRIOR APPROVAL, MUST BE WITHIN 10 FT OF METER ON THE PROPERTY SIDE AND MUST NOT OBSTRUCT SIGHT DISTANCE. PROVIDE 36" CLEAR OUTSIDE OF ENCLOSURE ON ALL SIDES.
3. SLAB SHALL BE 3000 PSI CONCRETE, 36"LONG x 22"WIDE x 4"THICK WITH 6x6-W1.4XW1.4 WWF OVER 3" COMPACTED CRUSHED STONE.
4. REDUCED PRESSURE BACKFLOW PREVENTER SHALL BE A **'WATTS' 1" 909-QT** (OR EQUAL). SHUT-OFF VALVES SHALL BE FULL PORT, LINE SIZE AND 1/4 TURN BRONZE UNION BALL VALVES.
5. PIPE RISERS AND BENDS SHALL BE TYPE 'K' COPPER OR BRASS FOR A MINIMUM OF 5 FT EACH SIDE OF VALVES.
6. THE ENCLOSURE SHALL BE A **'HOT-BOX' #HF013027023** (OR EQUAL) FIBERGLASS AND HAVE A FLIP-TOP ACCESS, LOCKABLE SS HASP & (2)TWO DRAINPORTS.
7. REQUIRED ELECTRICAL RECEPTACLE INDICATED BY [E] SHALL BE MOUNTED A MINIMUM OF 16" ABOVE THE SLAB.
8. THE ENCLOSURE SHALL BE HEATED WITH A 60W, 120V, 12 FT LONG HEAT TRACE CABLE.

# 1" REDUCED PRESSURE BACKFLOW PREVENTER

12

W-BX_RPBFP HB1 100 909-QT



PAGE 2

| SHEET: 1 OF 1 11/12/15 GSB 4.02 | 1" REDUCED PRESSURE BACKFLOW PREVENTER | DAVIE COUNTY PUBLIC UTILITIES daviecountyNC.gov (336)753-6090 |
|---|---|---|

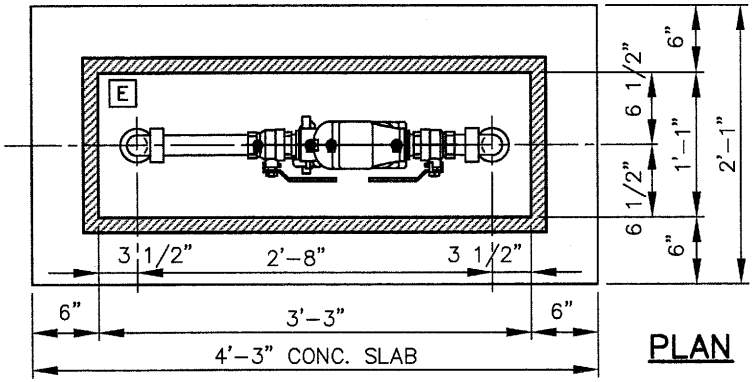


PLAN

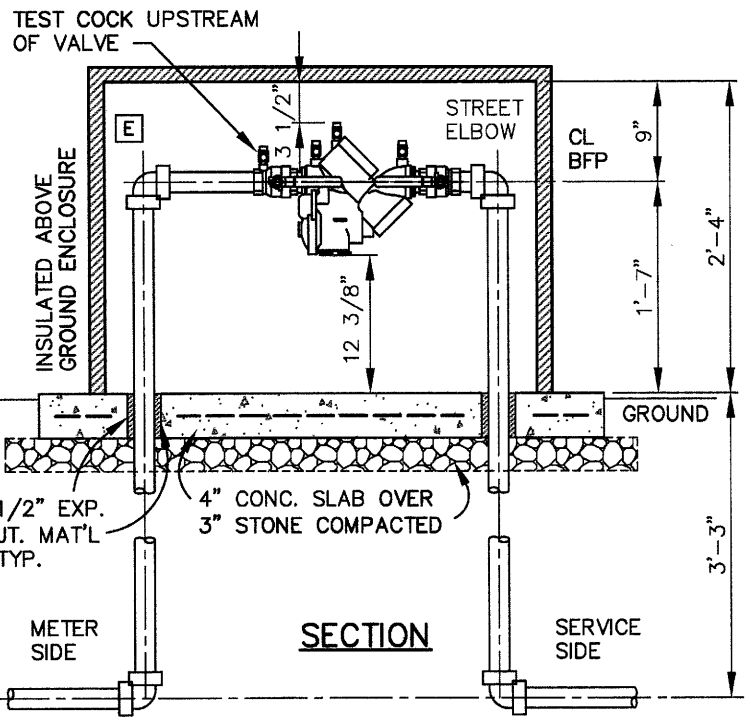


SECTION

## NOTES:

1. ALL DIMENSIONS ARE APPROXIMATE.
2. BACKFLOW PREVENTER LOCATION REQUIRES PRIOR APPROVAL, MUST BE WITHIN 10 FT OF METER ON THE PROPERTY SIDE AND MUST NOT OBSTRUCT SIGHT DISTANCE. PROVIDE 36" CLEAR OUTSIDE OF ENCLOSURE ON ALL SIDES.
3. SLAB SHALL BE 3000 PSI CONCRETE, 51"LONG x 25"WIDE x 4"THICK WITH 6x6-W1.4XW1.4 WWF OVER 3" COMPACTED CRUSHED STONE.
4. REDUCED PRESSURE BACKFLOW PREVENTER SHALL BE A **'WATTS' 1.5" 909M1-QT** (OR EQUAL). SHUT-OFF VALVES SHALL BE FULL PORT, LINE SIZE AND 1/4 TURN BRONZE UNION BALL VALVES.
5. PIPE RISERS AND BENDS SHALL BE TYPE 'K' COPPER OR BRASS FOR A MINIMUM OF 5 FT EACH SIDE OF VALVES.
6. THE ENCLOSURE SHALL BE A **'HOT-BOX' #HF013039028** (OR EQUAL) FIBERGLASS AND HAVE A FLIP-TOP ACCESS, LOCKABLE SS HASP & (2)TWO DRAINPORTS. COLOR BEIGE.
7. NO BY-PASS OF BACKFLOW PREVENTER WILL BE ACCEPTED.
8. REQUIRED ELECTRICAL RECEPTACLE INDICATED BY [E] SHALL BE GFI MOUNTED A MINIMUM OF 30" ABOVE THE SLAB.
9. THE ENCLOSURE SHALL BE HEATED WITH A 90W, 120V, 18 FT LONG HEAT TRACE CABLE.

# 1.5" REDUCED PRESSURE BACKFLOW PREVENTER

16

W-BX_RPBFP HB2 150 909M1-QT



PAGE 3

SHEET: 1 OF 1 11/12/15 GSB

4.03

1.5" REDUCED PRESSURE BACKFLOW PREVENTER

DAVIE COUNTY PUBLIC UTILITIES
daviecountyNC.gov (336)753-6090

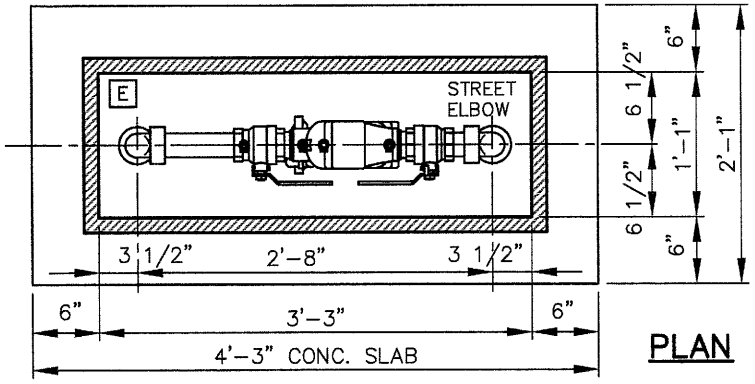


PLAN

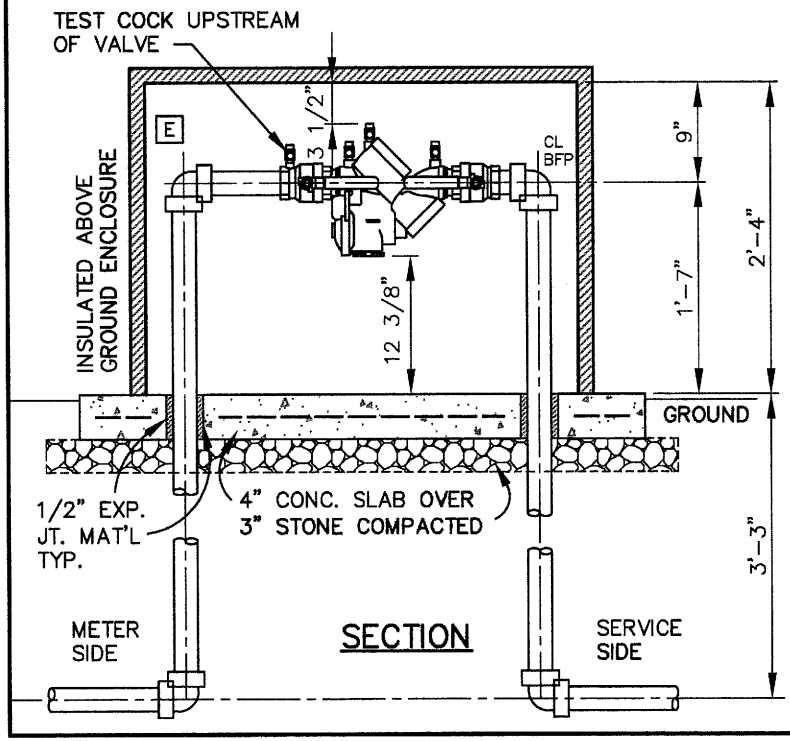


SECTION

## NOTES:

1. ALL DIMENSIONS ARE APPROXIMATE.
2. BACKFLOW PREVENTER LOCATION REQUIRES PRIOR APPROVAL, MUST BE WITHIN 10 FT OF METER ON THE PROPERTY SIDE AND MUST NOT OBSTRUCT SIGHT DISTANCE. PROVIDE 36" CLEAR OUTSIDE OF ENCLOSURE ON ALL SIDES.
3. SLAB SHALL BE 3000 PSI CONCRETE, 51"LONG x 25"WIDE x 4"THICK WITH 6x6-W1.4XW1.4 WWF OVER 3" COMPACTED CRUSHED STONE.
4. REDUCED PRESSURE BACKFLOW PREVENTER SHALL BE A **'WATTS' 2" 909M1-QT** (OR EQUAL). SHUT-OFF VALVES SHALL BE FULL PORT, LINE SIZE AND 1/4 TURN BRONZE UNION BALL VALVES.
5. PIPE RISERS AND BENDS SHALL BE TYPE 'K' COPPER OR BRASS FOR A MINIMUM OF 5 FT EACH SIDE OF VALVES.
6. THE ENCLOSURE SHALL BE A **'HOT-BOX' #HF013039028** (OR EQUAL) FIBERGLASS AND HAVE A FLIP-TOP ACCESS, LOCKABLE SS HASP & (2)TWO DRAINPORTS AT GRADE. COLOR BIEGE.
7. NO BY-PASS OF BACKFLOW PREVENTER WILL BE ACCEPTED.
8. REQUIRED ELECTRICAL RECEPTACLE INDICATED BY E SHALL BE GFI MOUNTED A MINIMUM OF 21" ABOVE THE SLAB.
9. THE ENCLOSURE SHALL BE HEATED WITH A 90W, 120V, 18 FT LONG HEAT TRACE CABLE.

# 2" REDUCED PRESSURE BACKFLOW PREVENTER

16

W-BX_RPBFP HB2 200 909M1-QT



PAGE 4

| SHEET: 1 OF 1 11/12/15 GSB 4.04 | 2" REDUCED PRESSURE BACKFLOW PREVENTER | DAVIE COUNTY PUBLIC UTILITIES daviecountyNC.gov (336)753-6090 |
|---|---|---|

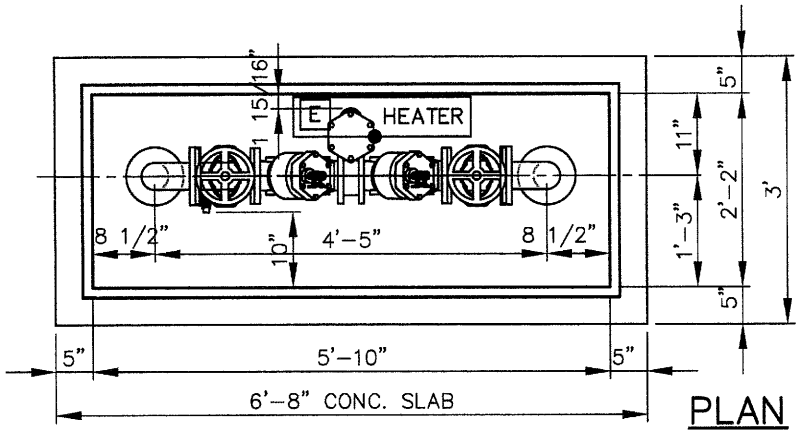


PLAN

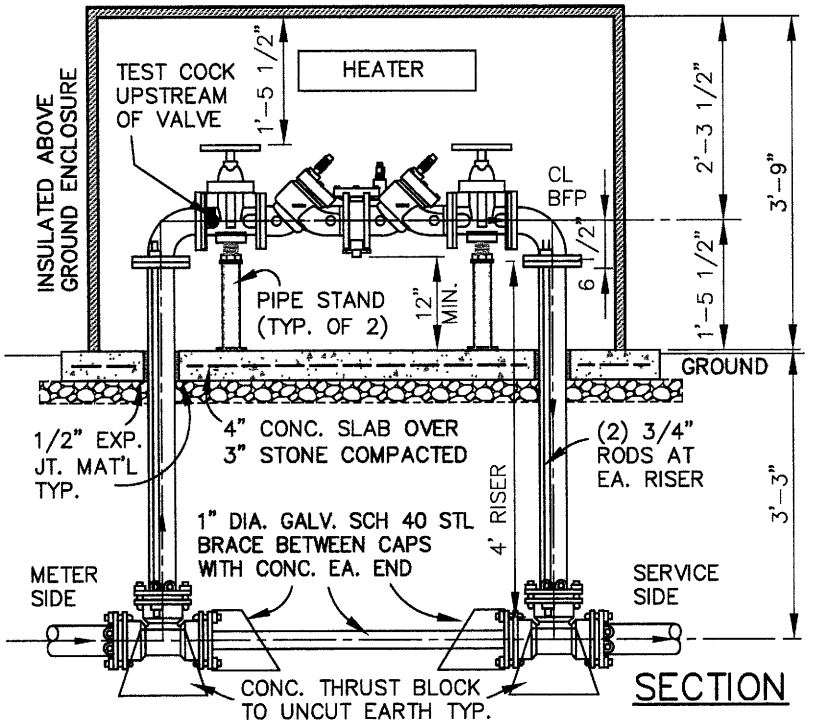


SECTION

## NOTES:

1. ALL DIMENSIONS ARE APPROXIMATE.
2. BACKFLOW PREVENTER LOCATION REQUIRES PRIOR APPROVAL, MUST BE WITHIN 10 FT OF METER ON THE PROPERTY SIDE AND MUST NOT OBSTRUCT SIGHT DISTANCE. PROVIDE 36" CLEAR OUTSIDE OF ENCLOSURE ON ALL SIDES.
3. SLAB SHALL BE 3000 PSI CONCRETE, 80"LONG x 36"WIDE x 4"THICK WITH 6x6-W4XW4 WWF OVER 3" COMPACTED CRUSHED STONE.
4. REDUCED PRESSURE BACKFLOW PREVENTER (RP) SHALL BE A **'CLA-VAL' 3" RP-4** (OR EQUAL) WITH AWWA 'NRS' RESILIENT WEDGE GATE VALVES.
5. PIPE RISERS AND BENDS SHALL BE DUCTILE IRON FOR A MINIMUM OF 8 FT EACH SIDE OF GATE VALVES. ALL BELOW GROUND FITTINGS SHALL BE RESTRAINED MECHANICAL JOINTS.
6. THE ABOVE GROUND ENCLOSURE SHALL BE A **'HOT-BOX' #HF026070045** (OR EQUAL) FIBERGLASS, INSULATED TO R8, HAVE A FLIP-TOP ACCESS, LOCKABLE SS HASP & (2)TWO DRAINPORTS AT GRADE. COLOR BEIGE.
7. NO BY-PASS OF BACKFLOW PREVENTER WILL BE ACCEPTED.
8. REQUIRED ELECTRICAL RECEPTACLE INDICATED BY E SHALL BE A GFI MOUNTED A MINIMUM OF 30" ABOVE THE SLAB.
9. THE ENCLOSURE SHALL BE HEATED WITH A 1000W, 120V AND 1 PH HEATERS.

# 3" REDUCED PRESSURE BACKFLOW PREVENTER

24

W-BX_RPBFP HB3 3_RP-4



PAGE 5

SHEET: 1 OF 1 11/12/15 GSB

4.05

3" REDUCED PRESSURE BACKFLOW PREVENTER

DAVIE COUNTY PUBLIC UTILITIES
daviecountyNC.gov (336)753-6090

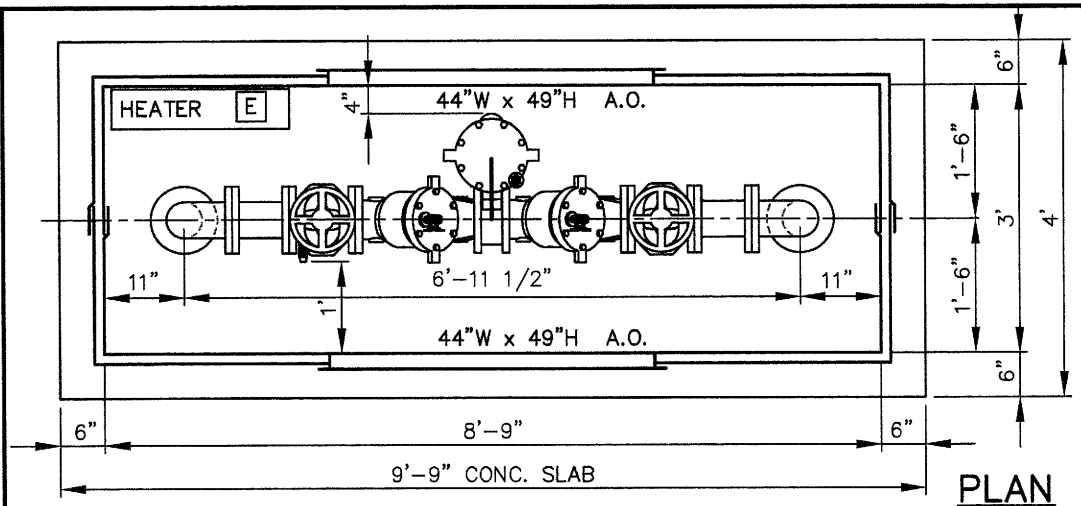


PLAN

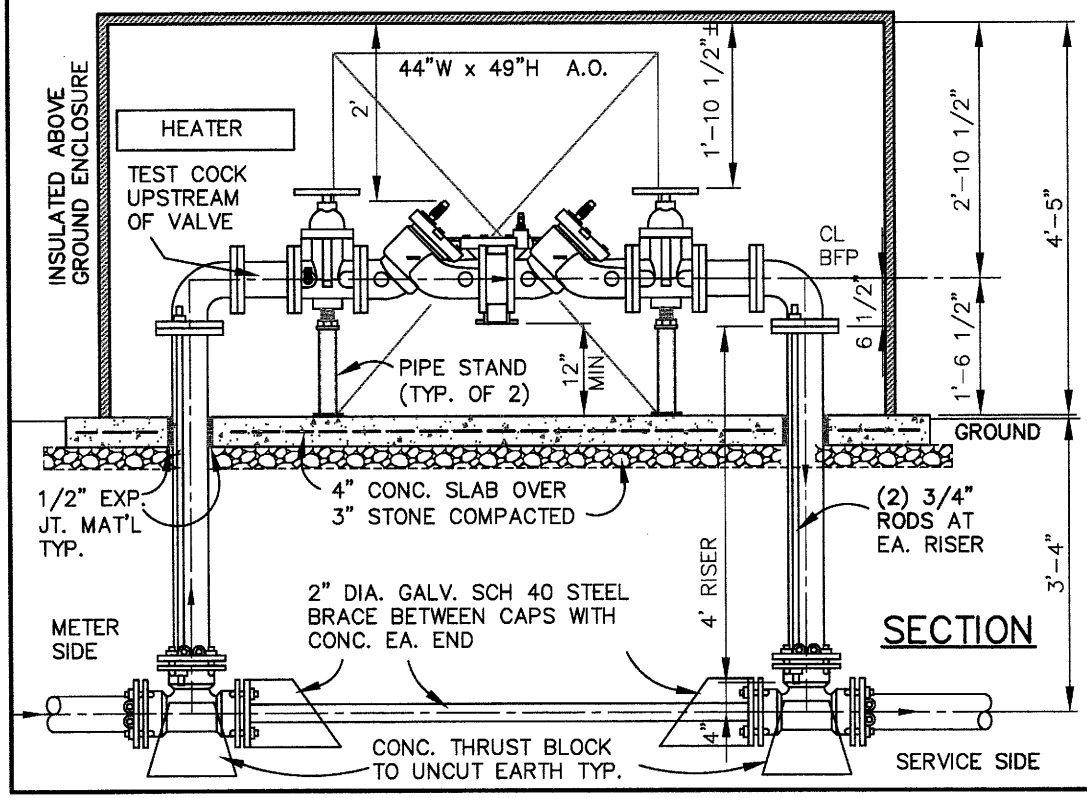


SECTION

## NOTES:

1. ALL DIMENSIONS ARE APPROXIMATE.
2. BACKFLOW PREVENTER LOCATION REQUIRES PRIOR APPROVAL, MUST BE WITHIN 10 FT OF METER ON THE PROPERTY SIDE AND MUST NOT OBSTRUCT SIGHT DISTANCE. PROVIDE 36" CLEAR OUTSIDE OF ENCLOSURE ON ALL SIDES.
3. SLAB SHALL BE 3000 PSI CONCRETE, 117"LONG x 48"WIDE x 4"THICK WITH 6x6-W4XW4 WWF OVER 3" COMPACTED CRUSHED STONE.
4. REDUCED PRESSURE BACKFLOW PREVENTER (RP) SHALL BE A **'CLA-VAL' 4" RP-4** (OR EQUAL) WITH AWWA 'NRS' RESILIENT WEDGE GATE VALVES.
5. PIPE RISERS AND BENDS SHALL BE DUCTILE IRON FOR A MINIMUM OF 8 FT EACH SIDE OF GATE VALVES. ALL BELOW GROUND FITTINGS SHALL BE RESTRAINED MECHANICAL JOINTS.
6. THE ABOVE GROUND ENCLOSURE SHALL BE A **'HOT-BOX' #HA036105053** (OR EQUAL) ALUMINUM, IN TWO REMOVABLE PARTS JOINED ALONG THE LONGITUDINAL CENTERLINE, INSULATED TO R8, HAVE AN ACCESS OPENING 'A.O.' ON BOTH SIDES AS SHOWN, LOCKABLE SS HASP AND (2)TWO DRAIN PORTS AT GRADE. COLOR BEIGE.
7. NO BY-PASS OF BACKFLOW PREVENTER WILL BE ACCEPTED.
8. TWO REQUIRED ELECTRICAL RECEPTACLE INDICATED BY [E] SHALL BE A GFI MOUNTED A MINIMUM OF 30" ABOVE THE SLAB.
9. THE ENCLOSURE SHALL BE HEATED WITH ONE 1900W, 120V AND 1 PH HEATERS.

# 4" REDUCED PRESSURE BACKFLOW PREVENTER

24

W-BX_RPBFP HB6 4_RP-4



PAGE 6

SHEET: 1 OF 1 11/12/15 GSB

4.06

4" REDUCED PRESSURE BACKFLOW PREVENTER

DAVIE COUNTY PUBLIC UTILITIES
daviecountyNC.gov (336)753-6090

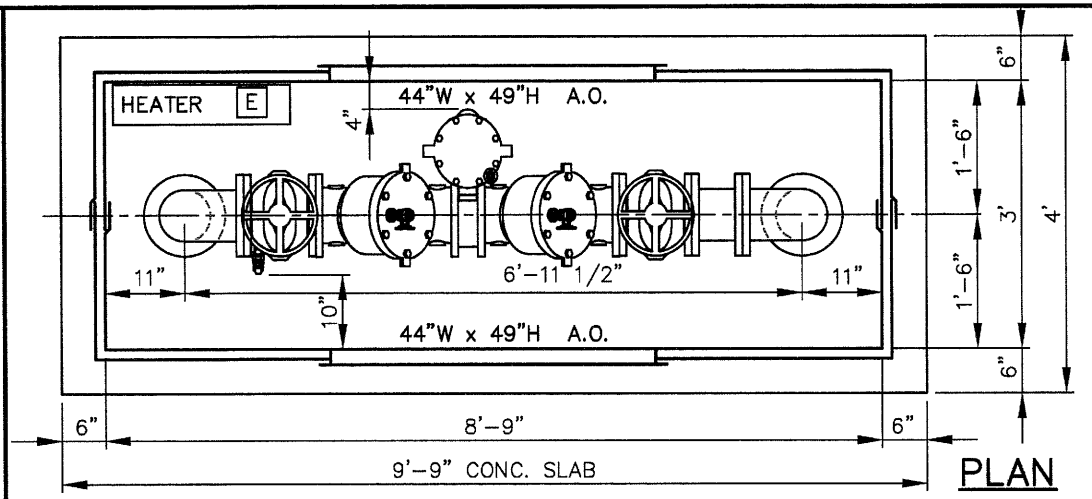


PLAN

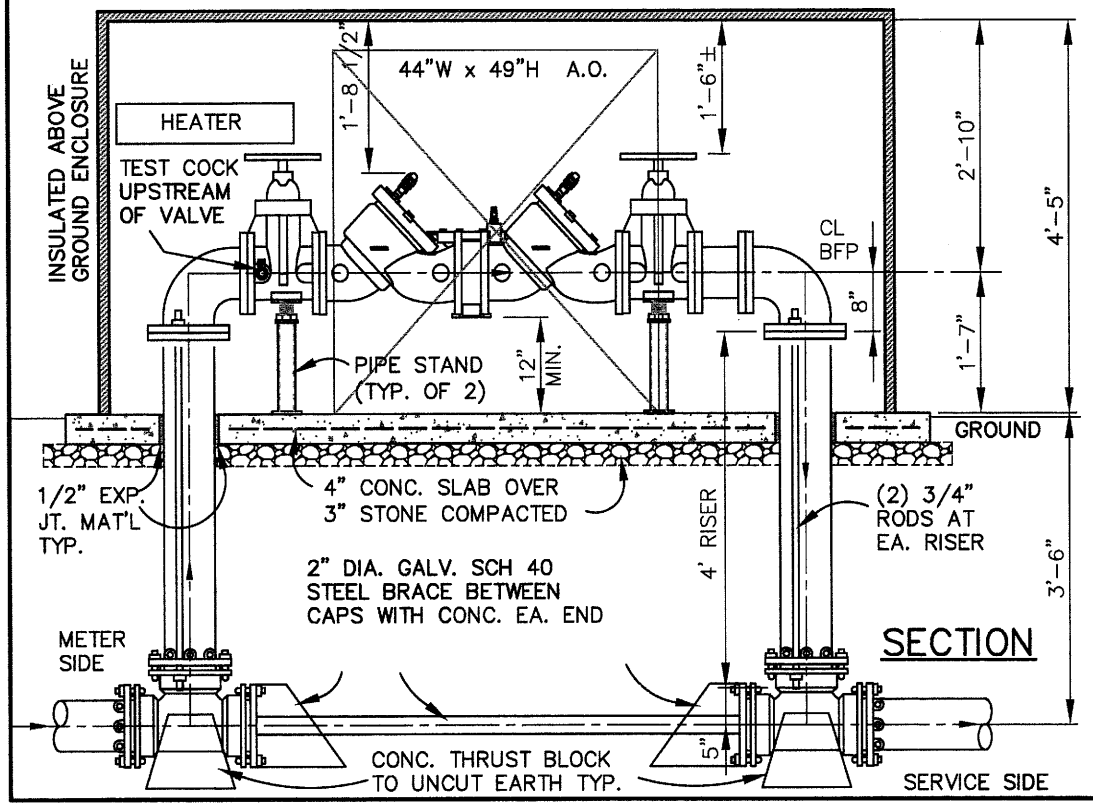


SECTION

## NOTES:

1. ALL DIMENSIONS ARE APPROXIMATE.
2. BACKFLOW PREVENTER LOCATION REQUIRES PRIOR APPROVAL, MUST BE WITHIN 10 FT OF METER ON THE PROPERTY SIDE AND MUST NOT OBSTRUCT SIGHT DISTANCE. PROVIDE 36" CLEAR OUTSIDE OF ENCLOSURE ON ALL SIDES.
3. SLAB SHALL BE 3000 PSI CONCRETE, 117"LONG x 48"WIDE x 4"THICK WITH 6x6-W1.4XW1.4 WWF OVER 3" COMPACTED CRUSHED STONE.
4. REDUCED PRESSURE BACKFLOW PREVENTER (RP) SHALL BE A **'CLA-VAL' 6" RP-4** (OR EQUAL) WITH AWWA 'NRS' RESILIENT WEDGE GATE VALVES.
5. PIPE RISERS AND BENDS SHALL BE DUCTILE IRON FOR A MINIMUM OF 8 FT EACH SIDE OF GATE VALVES. ALL BELOW GROUND FITTINGS SHALL BE RESTRAINED MECHANICAL JOINTS.
6. THE ABOVE GROUND ENCLOSURE SHALL BE A **'HOT-BOX' #HA036105053** (OR EQUAL) ALUMINUM, IN TWO REMOVABLE PARTS JOINED ALONG THE LONGITUDINAL CENTERLINE, INSULATED TO R8, HAVE AN ACCESS OPENING 'A.O.' ON BOTH SIDES AS SHOWN, LOCKABLE SS HASP AND (2)TWO DRAIN PORTS AT GRADE. COLOR BEIGE.
7. NO BY-PASS OF BACKFLOW PREVENTER WILL BE ACCEPTED.
8. TWO REQUIRED ELECTRICAL RECEPTACLE INDICATED BY E SHALL BE A GFI MOUNTED A MINIMUM OF 30" ABOVE THE SLAB.
9. THE ENCLOSURE SHALL BE HEATED WITH ONE 1900W, 120V AND 1 PH HEATERS.

# 6" REDUCED PRESSURE BACKFLOW PREVENTER

24

W-BX_RPBFP HB6 6_RP-4



PAGE 7

SHEET: 1 OF 1 11/12/15 GSB

4.07

6" REDUCED PRESSURE BACKFLOW PREVENTER

DAVIE COUNTY PUBLIC UTILITIES
daviecountyNC.gov (336)753-6090

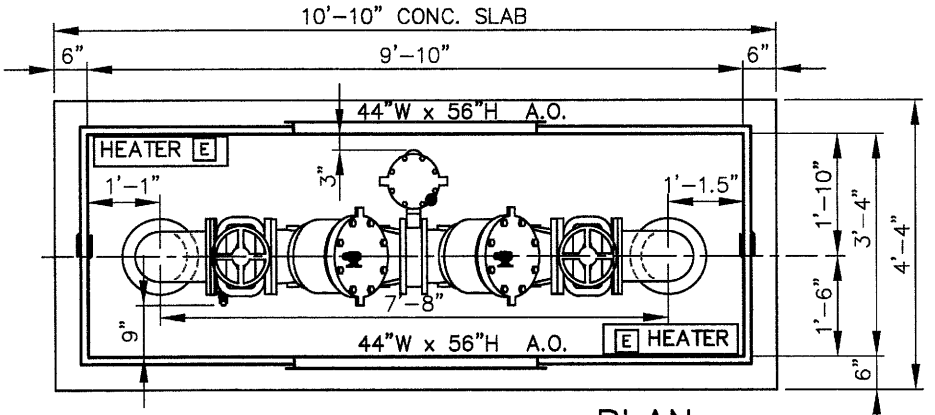


PLAN

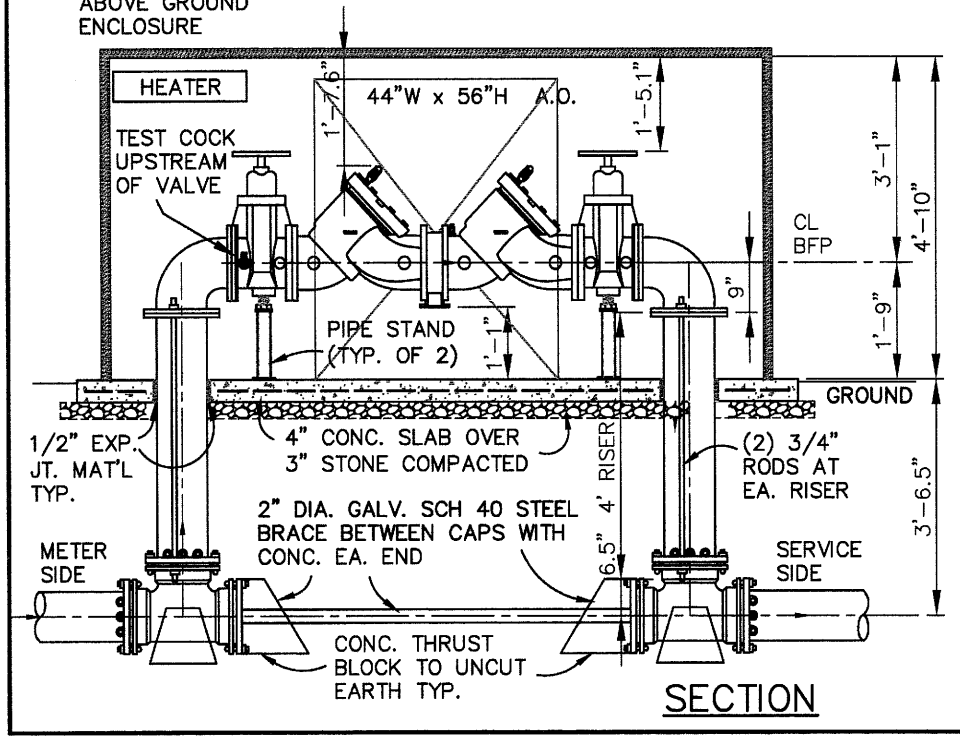


SECTION

## NOTES:

1. BACKFLOW PREVENTER LOCATION REQUIRES PRIOR APPROVAL, MUST BE WITHIN 10 FT OF METER ON THE PROPERTY SIDE AND MUST NOT OBSTRUCT SIGHT DISTANCE. PROVIDE 36" CLEAR OUTSIDE OF ENCLOSURE ON ALL SIDES.
2. SLAB SHALL BE 3000 PSI CONCRETE, 117"LONG x 48"WIDE x 4"THICK WITH 6x6-W4XW4 WWF OVER 3" COMPACTED CRUSHED STONE.
3. REDUCED PRESSURE BACKFLOW PREVENTER (RP) SHALL BE A **'CLA-VAL' 8" RP-4** (OR EQUAL) WITH AWWA 'NRS' RESILIENT WEDGE GATE VALVES.
4. PIPE RISERS AND BENDS SHALL BE DUCTILE IRON FOR A MINIMUM OF 8 FT EACH SIDE OF GATE VALVES. ALL BELOW GROUND FITTINGS SHALL BE RESTRAINED MECHANICAL JOINTS.
5. THE ABOVE GROUND ENCLOSURE SHALL BE A **'HOT-BOX' #HA040118058** (OR EQUAL) ALUMINUM, IN TWO REMOVABLE PARTS JOINED ALONG THE LONGITUDINAL CENTERLINE, INSULATED TO R8, HAVE AN ACCESS OPENING 'A.O.' ON BOTH SIDES AS SHOWN, LOCKABLE SS HASP AND (2)TWO DRAIN PORTS AT GRADE. COLOR BEIGE.
6. NO BY-PASS OF BACKFLOW PREVENTER WILL BE ACCEPTED.
7. TWO REQUIRED ELECTRICAL RECEPTACLE INDICATED BY E SHALL BE A GFI MOUNTED A MINIMUM OF 30" ABOVE THE SLAB.
8. THE ENCLOSURE SHALL BE HEATED WITH TWO 1500W, 120V AND 1 PH HEATERS.

# 8" REDUCED PRESSURE BACKFLOW PREVENTER

32

W-BX_RPBFP HB8 8_RP-4



PAGE 8

SHEET: 1 OF 1 11/12/15 GSB

4.08

8" REDUCED PRESSURE BACKFLOW PREVENTER

DAVIE COUNTY PUBLIC UTILITIES
daviecountyNC.gov (336)753-6090

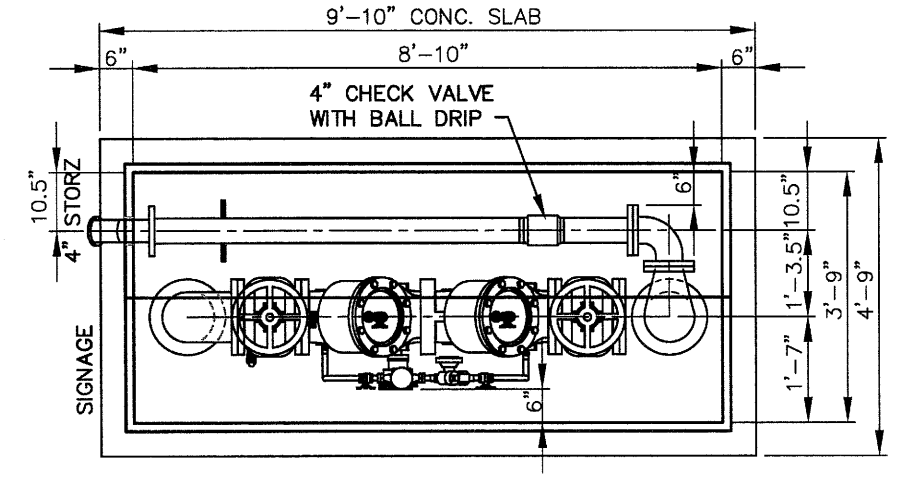


PLAN

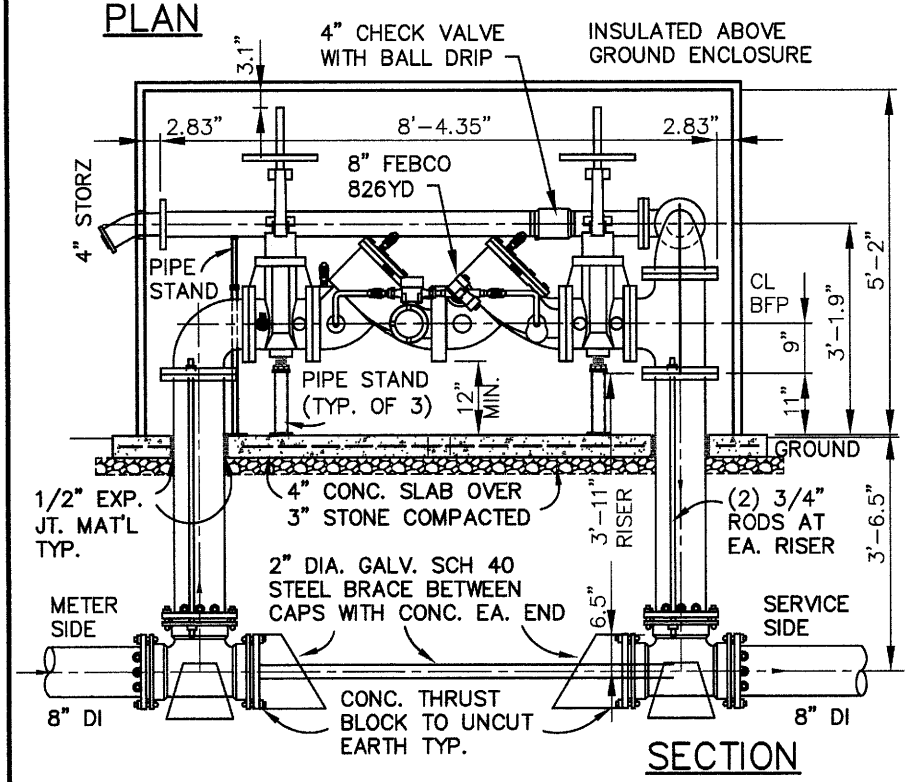


SECTION

## NOTES:

1. BACKFLOW PREVENTER LOCATION REQUIRES PRIOR APPROVAL, MUST BE WITHIN 10 FT OF METER ON THE PROPERTY SIDE AND MUST NOT OBSTRUCT SIGHT DISTANCE. PROVIDE 36" CLEAR OUTSIDE OF ENCLOSURE ON ALL SIDES.
2. SLAB SHALL BE 3000 PSI CONCRETE, 4"THICK WITH 6x6-W4XW4 WWF OVER 3" COMPACTED CRUSHED STONE.
3. BACKFLOW PREVENTER SHALL BE A **'FEBCO' 8" 826YD** WITH AWWA RESILIENT WEDGE GATE VALVES.
4. PIPE RISERS AND BENDS SHALL BE DUCTILE IRON FOR A MINIMUM OF 8 FT EACH SIDE OF GATE VALVES. ALL BELOW GROUND FITTINGS SHALL BE RESTRAINED MECHANICAL JOINTS.
5. THE ENCLOSURE SHALL BE A ALUMINUM **'HOT-BOX' #HA045106062500** WITH FDC PENETRATION AND REMOVABLE PARTS JOINED ALONG THE LONGITUDINAL CENTERLINE, INSULATED TO R8, HAVE AN ACCESS OPENING 'A.O.' ON BOTH SIDES AS SHOWN AND DRAIN PORTS AT GRADE. NO LIFTING HANDLES ON THE REAR SECTION DUE TO PENETRATION. ENCLOSURE COLOR SHALL BE BEIGE
6. NO BY-PASS OF BACKFLOW PREVENTER WILL BE ACCEPTED.
7. PROVIDE "FIRE DEPARTMENT CONNECTION" SIGNAGE IN ACCORDANCE WITH STATE AND LOCAL REGULATIONS.
8. TWO REQUIRED ELECTRICAL RECEPTACLE INDICATED BY [E] SHALL BE A GFI MOUNTED A MINIMUM OF 30" ABOVE THE SLAB.
9. THE ENCLOSURE SHALL BE HEATED WITH TWO 1500W, 120V SINGLE PHASE HEATERS.

# 8" FIRE LINE RPZ & FDC IN AN ENCLOSURE

32 W-FIRE RPZ+FDC 800



PAGE 9

SHEET: 1 OF 1 11/12/15 GSB

4.09

8" FIRE LINE RPZ & FDC IN AN ENCLOSURE

DAVIE COUNTY PUBLIC UTILITIES
daviecountyNC.gov (336)753-6090

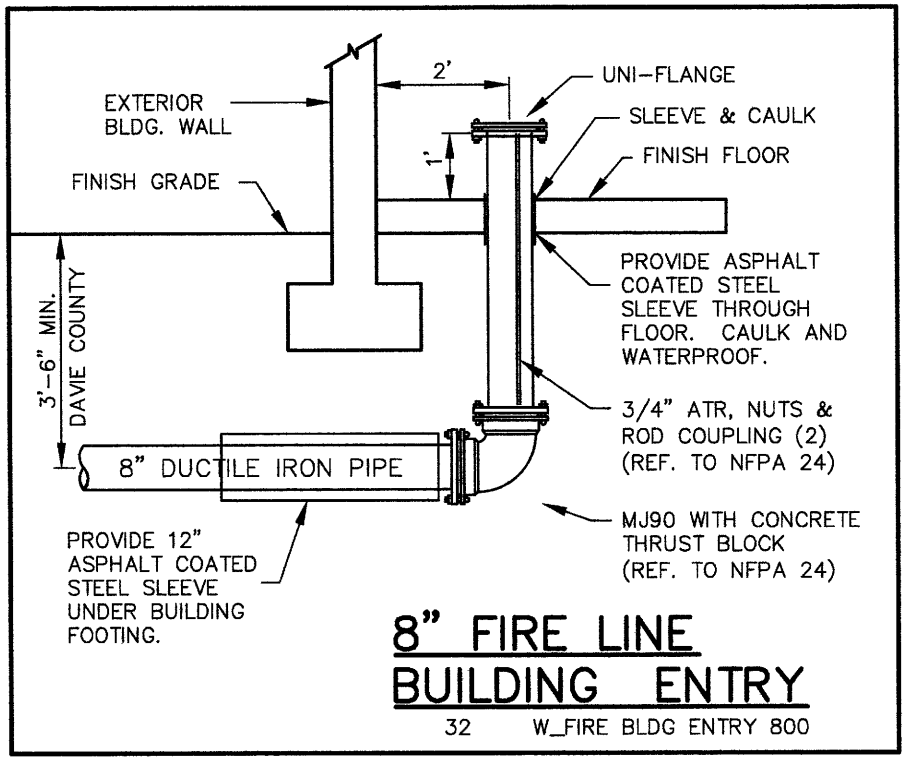




PAGE 10

| | | |
|---|---|---|
| SHEET: 1 OF 1 11/12/15 GSB<br>4.10 | 8" FIRE LINE BUILDING ENTRY | DAVIE COUNTY PUBLIC UTILITIES<br>daviecountyNC.gov (336)753-6090 |

# GRAVITY SEWER GENERAL NOTES:

1. STANDARD GRAVITY SANITARY SEWER SHALL BE SDR-35 PVC WHERE APPROPRIATE.

2. DUCTILE IRON PIPE SHALL BE USED IF SANITARY SEWER DOES NOT MEET OR EXCEED THE FOLLOWING SEPARATION:
   A. 36" MINIMUM GROUND COVER
   B. 12" VERTICAL FROM STORM SEWER PIPE (CROSSING OR PARALLEL)
   C. 18" VERTICAL UNDER OR 10' HORIZONTAL FROM WATER MAIN.
   D. 10' HORIZONTAL FROM STREAM, LAKE OR WATER IMPOUNDMENTS.

3. CENTER ONE 20' SECTION OF PIPE AT ALL PIPE CROSSINGS.

4. WHEN CONNECTING DUCTILE IRON PIPE TO PVC PIPE, USE AN APPROPRIATE TRANSITION GASKETS TO PVC BELL END AND A SLEEVE WITH APPROPRIATE GASKETS AT THE PLAIN END.

5. WATERTIGHT AND SEALED FRAME AND COVERS ARE REQUIRED WHERE THE RIM ELEVATION IS LESS THAN 1 FOOT ABOVE THE 100 YEAR FLOOD ELEVATION OR AS INDICATED ON THE APPROVED PROFILE. U.S. FOUNDRY & MANUFACTURING CORPORATION MODEL #USF 668-KL-BWT.

6. WHERE ANTI-SEEP COLLARS ARE REQUIRED, THEY SHALL BE PLACED A MINIMUM OF 8 FT FROM MANHOLES.

7. FOR MANHOLES IN ROAD RIGHT-OF-WAY, SET FRAME AND COVER TO SHOULDER GRADE IN A COMPACTED CONDITION.

8. OUTSIDE ROAD RIGHT-OF-WAY PROVIDE A PERMANENT EASEMENT OF 30' FOR GRAVITY SEWER AND 25' FOR SEWER FORCEMAIN WITH AN ADDITIONAL 10' CONSTRUCTION EASEMENT.

9. SEWER SERVICE SCH 40 PVC PIPE AND FITTINGS SHALL HAVE FULLY PRIMED MEDIUM VISCOSITY GLUED JOINTS.

10. ALL SEWER CONNECTIONS THAT CROSS UNDER AN EXISTING ROAD SHALL BE BORED.

11. PERFORM STRAIGHTNESS, LEAKAGE, INFILTRATION AND DEFLECTION TEST ON SEWER PIPE IN ACCORDANCE TO 'NCDENR' REGULATIONS.

DAVIE COUNTY PUBLIC UTILITIES
daviecountyNC.gov (336)753-6090

GRAVITY SEWER GENERAL NOTES

PAGE 1
SHEET: 1 OF 1 11/12/15 GSB
5.01

# FORCEMAIN GENERAL NOTES:

1. STANDARD SEWER FORCEMAIN SHALL BE PVC C-900 OR FUSIBLE HDPE WHERE APPROVED.

2. DUCTILE IRON PIPE SHALL BE USED IF SANITARY SEWER DOES NOT MEET OR EXCEED THE FOLLOWING SEPARATION:
   A. 36" MINIMUM GROUND COVER
   B. 12" VERTICAL FROM STORM SEWER PIPE (CROSSING OR PARALLEL)
   C. 18" VERTICAL UNDER OR 10' HORIZONTAL FROM WATER MAIN.
   D. 10' HORIZONTAL FROM STREAM, LAKE OR WATER IMPOUNDMENTS.

2. CENTER ONE 20' SECTION OF DUCTILE IRON PIPE AT ALL CROSSINGS.

3. FOR AIR VALVES IN ROAD RIGHT-OF-WAY, SET MANHOLE FRAME AND COVER TO SHOULDER GRADE WITH SURROUNDING SOIL OR STONE IN A COMPACTED CONDITION.

DAVIE COUNTY PUBLIC UTILITIES
daviecountyNC.gov
(336)753-6090

FORCEMAIN GENERAL NOTES

PAGE 2
SHEET: 1 OF 1 11/12/15 GSB
5.02

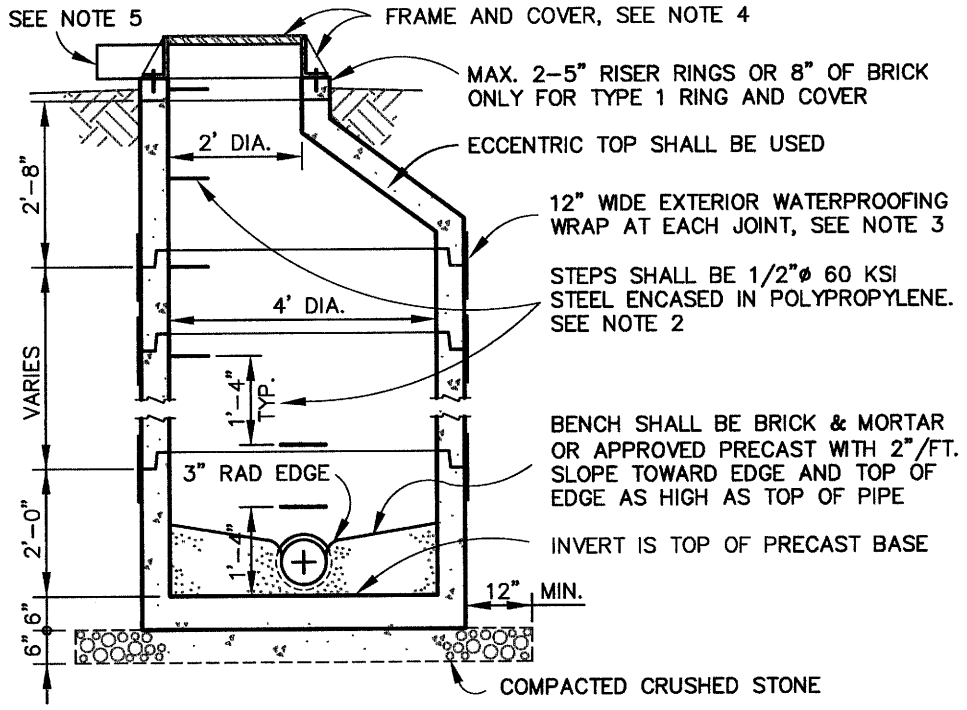


## GENERAL NOTES:

1. PRECAST MANHOLE COMPONENTS SHALL MEET LATEST REVISION OF ASTM C-478.
2. ASSEMBLE RISERS SO ALL STEPS WILL HAVE A 16" SPACING THE FULL HEIGHT OF MANHOLE. FIRST STEP SHALL BE MAXIMUM 22" ABOVE BENCH. ALIGN STEPS AND COVER OVER OUTLET PIPE UNLESS NOTED OTHERWISE.
3. AT ALL JOINTS PROVIDE APPROVED GASKET, FILL BOTH OUTSIDE AND INSIDE JOINTS WITH NON-SHRINK GROUT AND WRAP EXTERIOR JOINTS WITH 12" WIDE WATERPROOFING. GROUT LIFT HOLES AND PIPE ENDS.
4. FRAME AND COVER SHALL BE U.S. FOUNDRY #669-KL AND HAVE "SANITARY SEWER" LABEL AND (2)1"ø VENT HOLES. USE #669-KL-BWTL WITHOUT HOLES FOR WATERTIGHT LIDS. PROVIDE ROPE MASTIC BETWEEN FRAME AND CONCRETE. IF FRAME IS NOT SURROUND BY SOIL OR CONSTRUCTION MATERIAL, PROVIDE (4) 3/8"x1.5" 304 SS LAG ANCHOR BOLTS THRU FRAME AND INTO CONCRETE WITH LEAD SHIELD ANCHORS.
5. WHERE MANHOLE TOP COULD BE SUBJECT TO VEHICULAR TRAFFIC, PROVIDE CONCRETE COLLAR WITH MINIMUM 6"D x12"W WITH TOP OF CONCRETE BEING 1.5" BELOW RIM.
6. GRADE TO DRAIN AWAY FROM MANHOLE RING AND COVER AS NEEDED.

# PRECAST SANITARY SEWER MANHOLE

REF. NCDOT RSD 840.67 32 840-67WS

DAVIE COUNTY PUBLIC UTILITIES
(336)753-6090
daviecountync.gov

PRECAST SANITARY SEWER MANHOLE

PAGE 3
SHEET: 1 OF 1 11/12/15 GSB
5.03

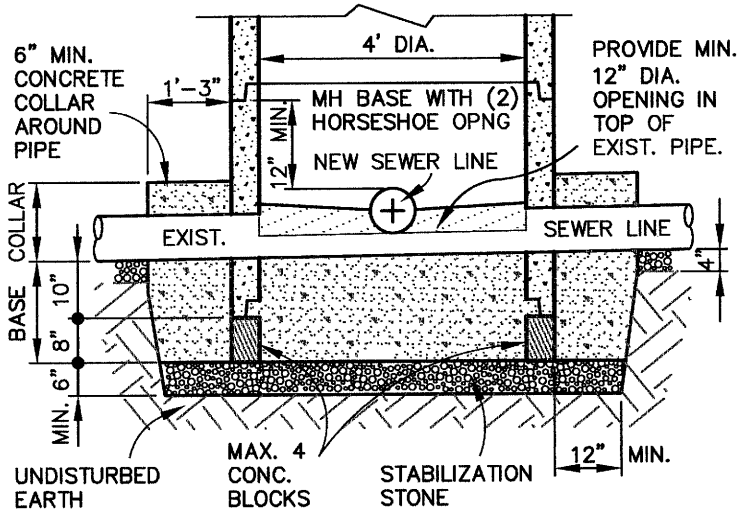


## SEQUENCE NOTES:

1. COMPACT STONE, POUR 4000 PSI CONCRETE TO INVERT OF EXISTING PIPE, THEN PLACE HORSESHOE MANHOLE IN WET CONCRETE OVER EXISTING PIPE AND ONTO CONCRETE BLOCKS.
2. AFTER BASE CONCRETE HAS SET, CORE HOLE FOR NEW SEWER LINE AND THEN SET NEW INCOMING SEWER LINE.
3. CUT OUT TOP HALF OF EXISTING PIPE. POUR NEW CONCRETE BENCH. SLOPE NEW INVERT AND BENCH TO DRAIN.
4. WATERPROOF ALL COLD JOINTS AROUND PIPES WITH NON-SHRINK GROUT.
5. POUR CONCRETE COLLAR.

# HORSESHOE MANHOLE CONSTRUCTION

32 840HOR_WS

DAVIE COUNTY PUBLIC UTILITIES
daviecountyNC.gov
(336)753-6090

HORSESHOE MANHOLE CONSTRUCTION

PAGE 4
SHEET: 1 OF 1 11/12/15 GSB
5.04

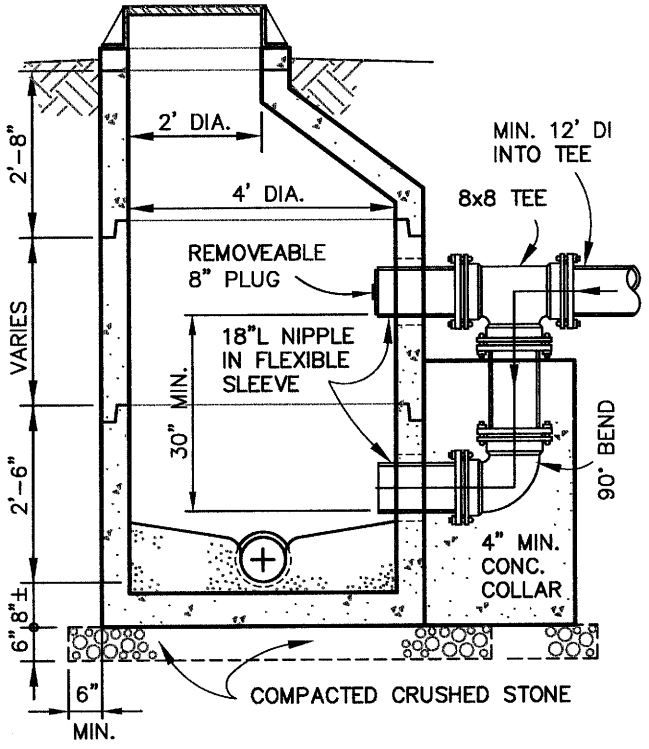


## GENERAL NOTES:

1. SEE STANDARD PRECAST SANITARY SEWER MANHOLE FOR ADDITIONAL MANHOLE DETAILS.
2. ALL PIPE AND FITTINGS SHALL BE DUCTILE IRON. PROVIDE MINIMUM OF 12 FT OF DUCTILE IRON PIPE UPSTREAM OF TEE.
3. CONCRETE ENCASEMENT FOR OUTSIDE DROP MANHOLES SHALL BE STANDARD SUBSURFACE SUPPORT CONCRETE AS SPECIFIED IN NOTES FOR TRENCH AND PIPING.

# OUTSIDE DROP PRECAST MANHOLE

REF. NCDOT RSD 840.67 32 840-67oD

DAVIE COUNTY PUBLIC UTILITIES
(336)753-6090
daviecountyNC.gov

OUTSIDE DROP
PRECAST MANHOLE

PAGE 5
SHEET: 1 OF 1 11/12/15 GSB
5.05

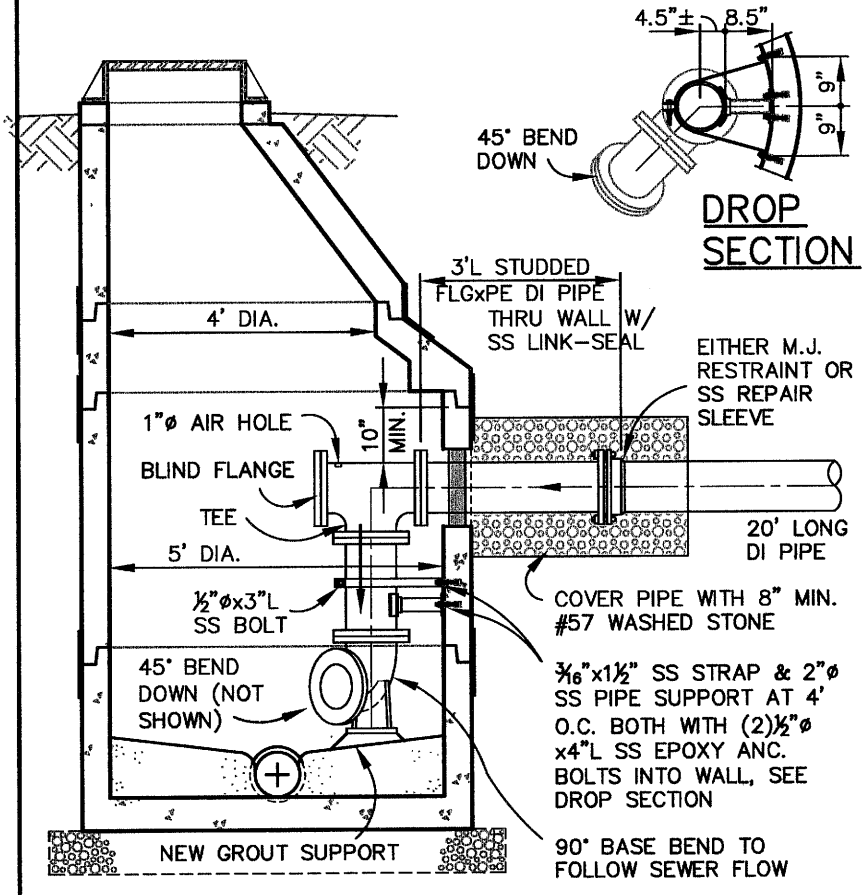


## GENERAL NOTES:

1. ALL PIPE AND FITTINGS INSIDE MANHOLE SHALL BE FLANGED DUCTILE IRON.
2. LOCATE STEPS & MH TOP AS NEEDED.

# 8" INSIDE DROP PRECAST MANHOLE

REF. NCDOT 840.67 32 840-67ID_8PIPSUPRT

DAVIE COUNTY PUBLIC UTILITIES
daviecountyNC.gov
(336)753-6090

8" INSIDE DROP PRECAST MANHOLE

SHEET: 1 OF 1 11/12/15 GSB

5.06

PAGE 6

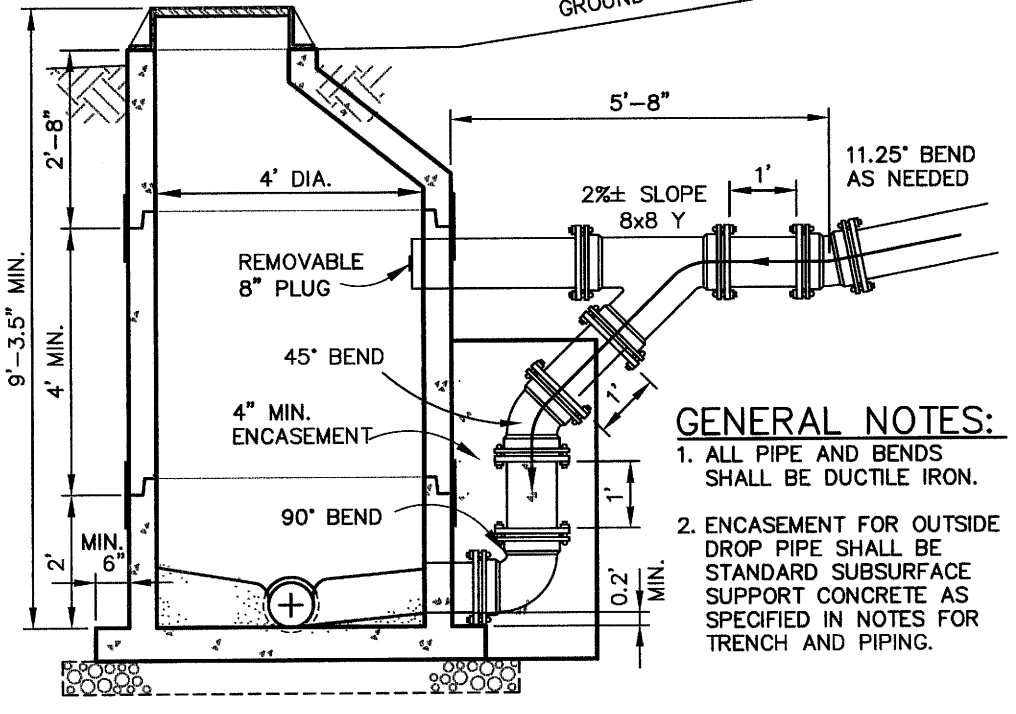


## GENERAL NOTES:

1. ALL PIPE AND BENDS SHALL BE DUCTILE IRON.
2. ENCASEMENT FOR OUTSIDE DROP PIPE SHALL BE STANDARD SUBSURFACE SUPPORT CONCRETE AS SPECIFIED IN NOTES FOR TRENCH AND PIPING.

# OUTSIDE 'Y' DROP PRECAST MANHOLE

REF. NCDOT RSD 840.67 32 840-67oD+6'y

DAVIE COUNTY PUBLIC UTILITIES
(336)753-6090
daviecountyNC.gov

OUTSIDE 'Y' DROP
PRECAST MANHOLE

SHEET: 1 OF 1 11/12/15 GSB

5.07

PAGE 7

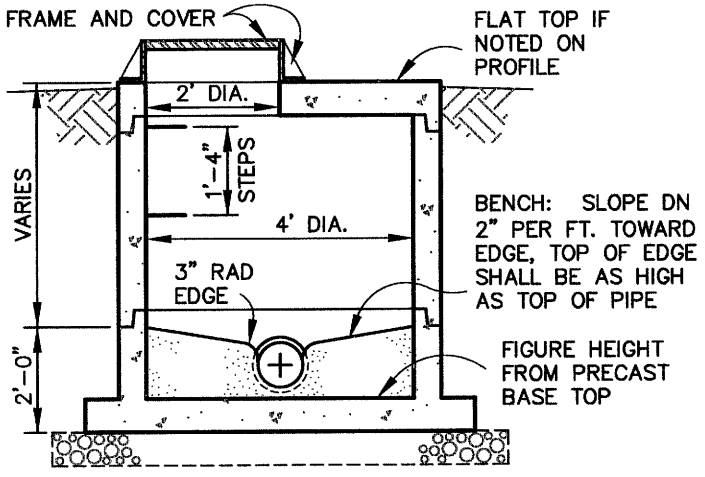


NOTE:
SEE STANDARD PRECAST SANITARY SEWER MANHOLE FOR ADDITIONAL MANHOLE DETAILS.

# FLAT TOP PRECAST MANHOLE

32 840-67flat top+

DAVIE COUNTY PUBLIC UTILITIES
davie county NC.gov
(336)753-6090

FLAT TOP PRECAST MANHOLE

PAGE 8
SHEET: 1 OF 1 11/12/15 GSB
5.08

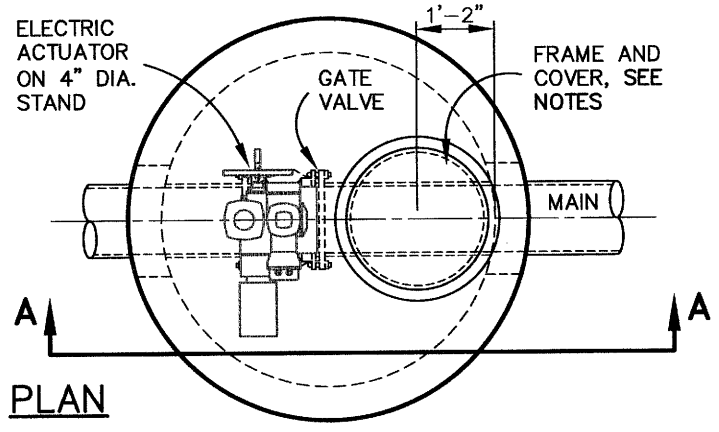


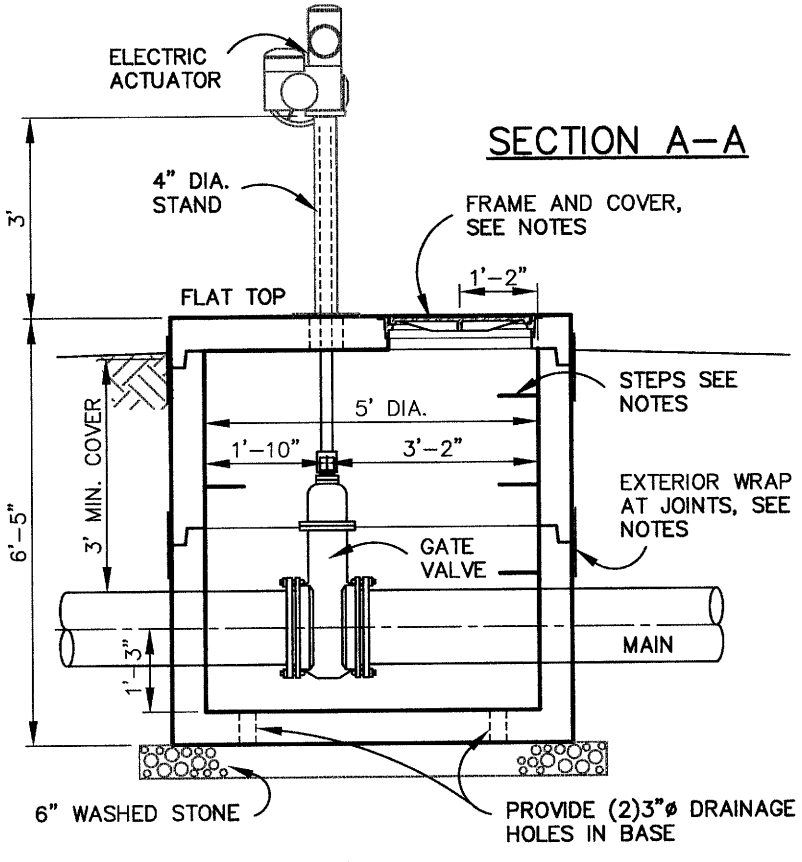


# MANHOLE WITH GATE VALVE & ELECTRIC ACTUATOR

32 840-67_5-gv-actuator

DAVIE COUNTY PUBLIC UTILITIES
daviecountyNC.gov
(336)753-6090

MANHOLE WITH GATE VALVE & ELECTRIC ACTUATOR

11/12/15 GSB

SHEET: 1 OF 1 5.09

PAGE 9

## NOTES:

1. MANHOLES CAN BE CORED DRILLED LESS THAN 18" ABOVE SHELF FOR SERVICE CONNECTION.
2. COMPACT ALL BACKFILL TO 90% STANDARD PROCTOR OR BETTER.

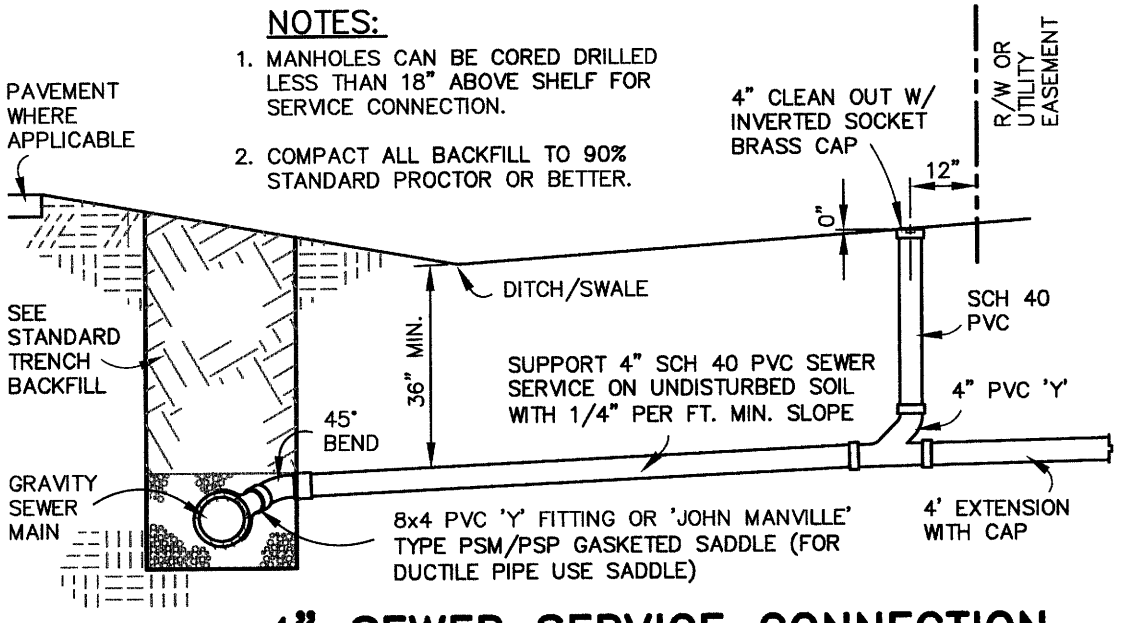


# 4" SEWER SERVICE CONNECTION

32 SS-CNT4

DAVIE COUNTY PUBLIC UTILITIES
(336)753-6090
daviecountyNC.gov

4" SEWER SERVICE CONNECTION

SHEET: 1 OF 1 | 11/12/15 GSB | 6.01

PAGE 1

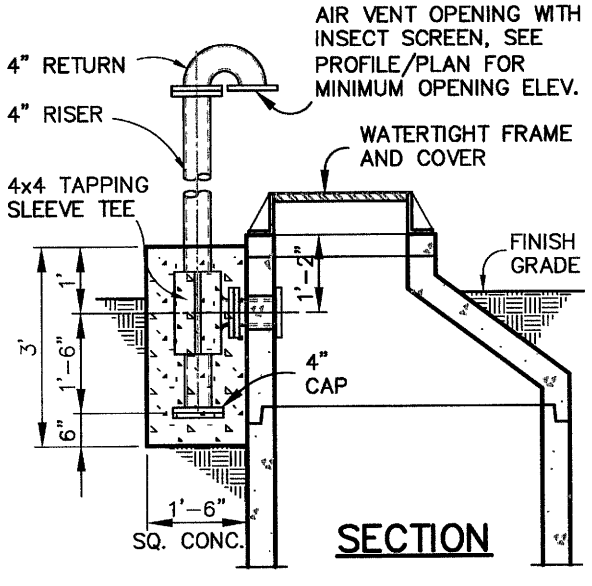


## GENERAL NOTES:

1. ALL PIPE AND BENDS SHALL BE DUCTILE IRON.
2. AIR VENT OPENING SHALL BE 1 FOOT MINIMUM ABOVE THE 100 YEAR FLOOD ELEVATION.
3. MOUNT 4"ø FLANGE NIPPLE WITH (4)3/4"x4"L STAINLESS STEEL WEDGE ANCHORS TO THE INSIDE WALL.
4. ENCASEMENT FOR VENT PIPE SHALL BE STANDARD SUBSURFACE SUPPORT CONCRETE AS SPECIFIED IN NOTES FOR TRENCH AND PIPING.
5. USE 4"ø FLANGE RETURN WITH SS INSECT SCREEN OVER VENT OPENING.

# VENT FOR SANITARY SEWER MANHOLE

32 840-67VENT

DAVIE COUNTY PUBLIC UTILITIES
daviecountyNC.gov
(336)753-6090

VENT FOR SANITARY SEWER MANHOLE

PAGE 2
SHEET: 1 OF 1 11/12/15 GSB
6.02

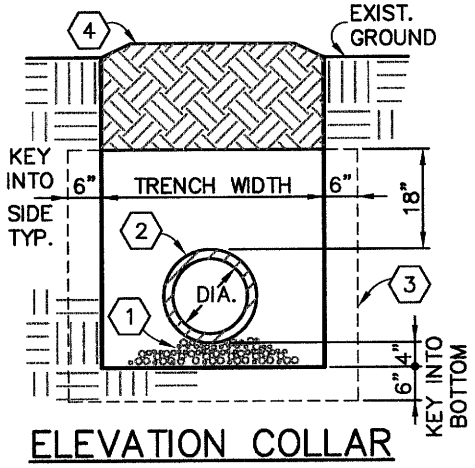


ELEVATION COLLAR

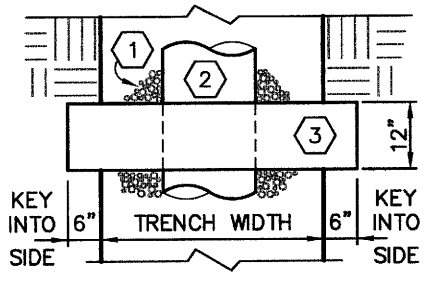


PLAN COLLAR

KEYNOTES

1. BEDDING MATERIAL OUTSIDE COLLAR
2. SANITARY SEWER PIPE, DIAMETER VARIES
3. CLASS B CONCRETE W/ FIBERMESH
4. SEE SECTION STANDARD TRENCH BACKFILL

# ANTISEEP/ ANCHOR COLLAR

32 ANTISEEP

DAVIE COUNTY PUBLIC UTILITIES
daviecountyNC.gov
(336)753-6090

ANTISEEP/ANCHOR COLLAR

SHEET: 1 OF 1 11/12/15 GSB

6.03

PAGE 3

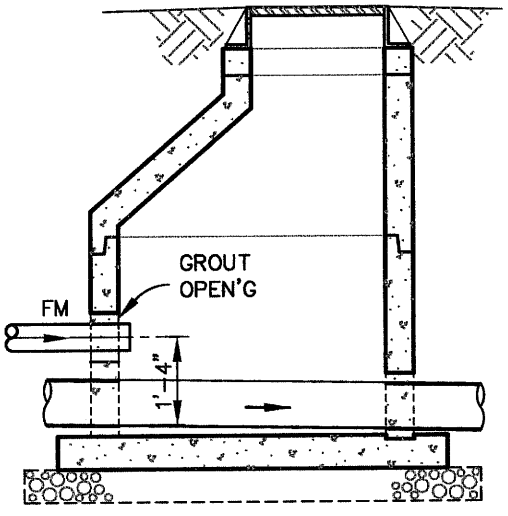


**FM OUTLET INTO MANHOLE**

32 840fm out low+

DAVIE COUNTY PUBLIC UTILITIES
daviecountyNC.gov
(336)753-6090

FM OUTLET INTO MANHOLE

PAGE 4
SHEET: 1 OF 1
11/12/15
GSB
6.04

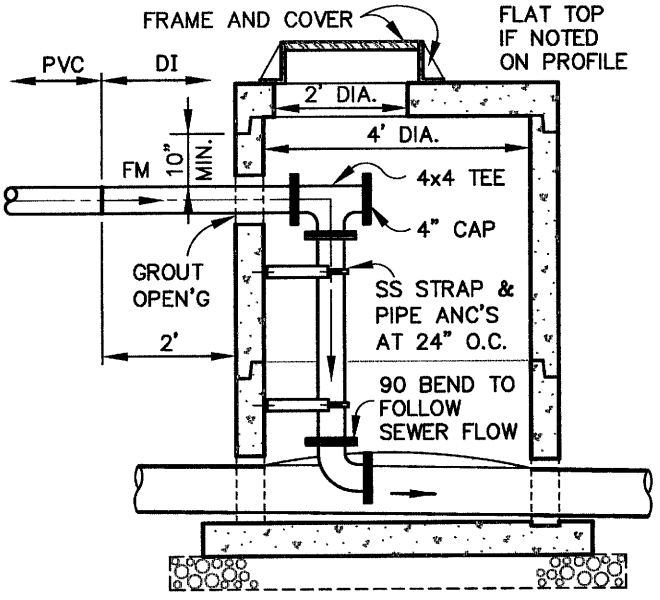


NOTES:

1. SEE STANDARD PRECAST SANITARY SEWER MANHOLE FOR ADDITIONAL MANHOLE DETAILS.
2. PROVIDE DUCTILE IRON PIPE AND FLANGE FITTINGS INSIDE MANHOLE.

# FORCEMAIN OUTLET INSIDE DROP MANHOLE

32 840id 4fm+

DAVIE COUNTY PUBLIC UTILITIES
daviecountyNC.gov
(336)753-6090

FORCEMAIN OUTLET
INSIDE DROP MANHOLE

PAGE 5
SHEET: 1 OF 1 11/12/15 GSB
6.05

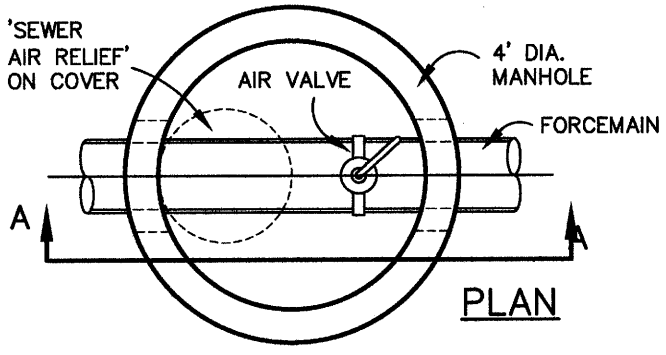


PLAN

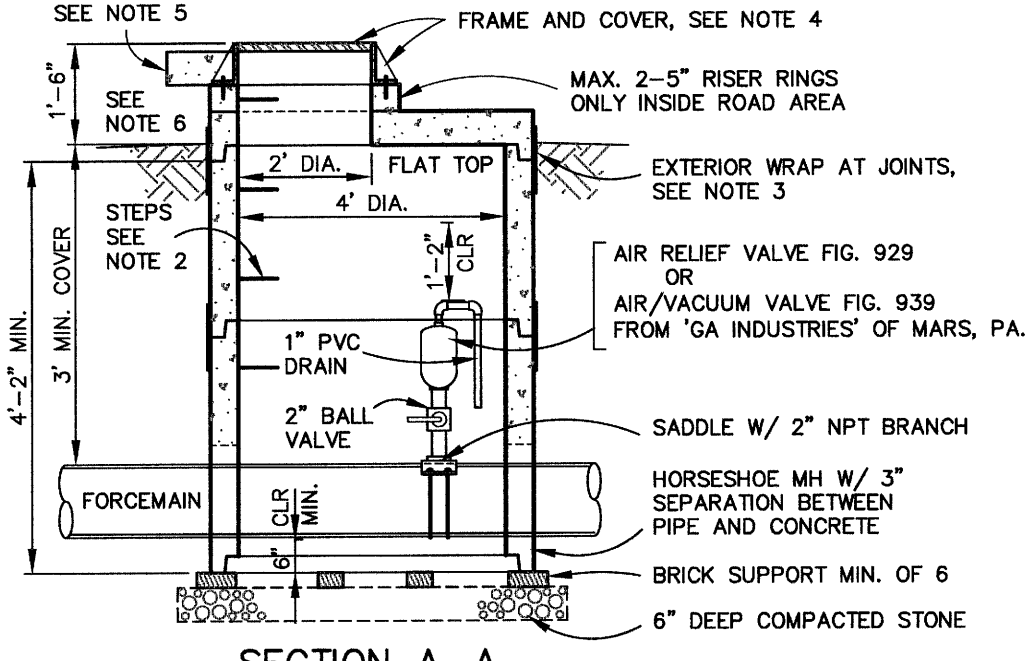


SECTION A–A

## NOTES:

1. MANHOLE COMPONENTS SHALL MEET REQUIREMENTS OF AASHTO M199.
2. STEPS SHALL BE ½"ø 60 KSI STEEL ENCASED IN POLYPROPYLENE. ASSEMBLE RISERS SO ALL STEPS WILL HAVE A 16" SPACING THE FULL HEIGHT OF MANHOLE. FIRST STEP SHALL BE MAXIMUM 20" ABOVE FORCEMAIN. MH STEPS AND COVER SHALL BE ALIGNED AS SHOWN.
3. PROVIDE BUTYL RUBBER GASKET IN ALL JOINTS. FILL ALL JOINTS AND LIFT HOLES WITH NON–SHRINK GROUT. PROVIDE 12" WIDE EXTERIOR WATERPROOFING WRAP AT EACH JOINT.
4. FRAME AND COVER SHALL BE U.S. FOUNDRY #669–KL AND HAVE "SEWER AIR RELIEF" LABEL AND (2)1"ø VENT HOLES. USE #668–KL–BWT WITHOUT HOLES FOR WATERTIGHT LIDS. PROVIDE ROPE MASTIC BETWEEN FRAME AND CONCRETE. IF FRAME IS NOT SURROUNDED BY SOIL OR CONSTRUCTION MATERIAL, PROVIDE (4) ⅜"x1½" 304 SS LAG ANCHOR BOLTS THRU FRAME AND INTO CONCRETE WITH LEAD SHIELD ANCHORS.
5. WHERE MANHOLE TOP COULD BE SUBJECT TO VEHICULAR TRAFFIC, PROVIDE CONCRETE COLLAR WITH MINIMUM 6"D x12"W WITH TOP OF CONCRETE BEING 1½" BELOW RIM. GRADE TO DRAIN AWAY FROM FRAME AND COVER.
6. OUTSIDE ROAD AREA THE TOP OF FRAME AND COVER SHALL BE A MINIMUM 18" ABOVE THE GROUND.

# AIR RELIEF VALVE & AIR/VACUUM VALVE MANHOLE



DAVIE COUNTY PUBLIC UTILITIES (336)753–6090 daviecountyNC.gov

AIR RELIEF VALVE & AIR/VACUUM VALVE MANHOLE

PAGE 6 SHEET: 1 OF 1 11/12/15 GSB 6.06